ORDER NO. DSC0508018CE
B26

Service Manual

Digital Camera

LUMIX
LEICA
DC VARIO-ELMARIT

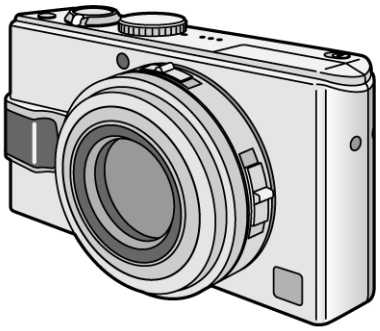

DMC-LX1PP
DMC-LX1EB
DMC-LX1EG
DMC-LX1EGM
DMC-LX1GC
DMC-LX1GD
DMC-LX1GK
DMC-LX1GN
DMC-LX1GT
DMC-LX1SG

Vol. 1

Colour
(S).....Silver Type (Except GD)
(K).....Black Type (Except GN/GT/SG)

⚠ WARNING

This service information is designed for experienced repair technicians only and is not designed for use by the general public.
It does not contain warnings or cautions to advise non-technical individuals of potential dangers in attempting to service a product.
Products powered by electricity should be serviced or repaired only by experienced professional technicians. Any attempt to service or repair the product or products dealt with in this service information by anyone else could result in serious injury or death.

Panasonic

© 2005 Matsushita Electric Industrial Co., Ltd. All rights reserved. Unauthorized copying and distribution is a violation of law.

TABLE OF CONTENTS

PAGE

1 Safety Precaution ---------- 3
1.1. General Guidelines ---------- 3
1.2. Leakage Current Cold Check ---------- 3
1.3. Leakage Current Hot Check (See Figure 1.) -------- 3
1.4. How to Discharge the Capacitor on Flash PCB ---------- 4
2 Warning ---------- 5
2.1. Prevention of Electro Static Discharge (ESD) to ElectrostaticallySensitive (ES) Devices ---------- 5
2.2. How to Recycle the Lithium Ion Battery (U.S. Only) ---------- 5
2.3. Caution for AC Cord(For EB/GC/SG) ---------- 6
2.4. How to Replace the Lithium Battery ---------- 7
3 Service Navigation ---------- 9
3.1. Introduction ---------- 9
3.2. About Lead Free Solder (PbF) ---------- 9
3.3. Important Notice 1:(Other than U.S.A. and Canadian Market) ---------- 9
3.4. How to Define the Model Suffix (NTSC or PAL model) ---------- 10
4 Specifications ---------- 12
5 Location of Controls and Components ---------- 13
6 Service Mode ---------- 16
6.1. Error Code Memory Function ---------- 16
6.2. Confirmation of Firmware Version ---------- 19
7 Service Fixture & Tools ---------- 20
7.1. Service Fixture and Tools ---------- 20
7.2. When Replacing the Main PCB ---------- 20
7.3. Service Position ---------- 21
8 Disassembly and Assembly Instructions ---------- 22
8.1. Disassembly Flow Chart ---------- 22
8.2. PCB Location ---------- 22
8.3. Disassembly Procedure ---------- 23
8.4. Disassembly Procedure for the Lens ---------- 29
8.5. Assembly Procedure for the Lens ---------- 31
8.6. Removal of the CCD ---------- 34
9 Measurements and Adjustments ---------- 35
9.1. Adjustment Procedures ---------- 35
10 Maintenace ---------- 35
10.1. Cleanig Lens and LCD Panel ---------- 35

PAGE

1 Safety Precaution

1.1. General Guidelines

1. **IMPORTANT SAFETY NOTICE**
   There are special components used in this equipment which are important for safety. These parts are marked by ⚠ in the Schematic Diagrams, Circuit Board Layout, Exploded Views and Replacement Parts List. It is essential that these critical parts should be replaced with manufacturer's specified parts to prevent X-RADIATION, shock, fire, or other hazards. Do not modify the original design without permission of manufacturer.
2. An Isolation Transformer should always be used during the servicing of AC Adaptor whose chassis is not isolated from the AC power line. Use a transformer of adequate power rating as this protects the technician from accidents resulting in personal injury from electrical shocks. It will also protect AC Adaptor from being damaged by accidental shorting that may occur during servicing.
3. When servicing, observe the original lead dress. If a short circuit is found, replace all parts which have been overheated or damaged by the short circuit.
4. After servicing, see to it that all the protective devices such as insulation barriers, insulation papers shields are properly installed.
5. After servicing, make the following leakage current checks to prevent the customer from being exposed to shock hazards.

1.2. Leakage Current Cold Check

1. Unplug the AC cord and connect a jumper between the two prongs on the plug.
2. Measure the resistance value, with an ohmmeter, between the jumpered AC plug and each exposed metallic cabinet part on the equipment such as screwheads, connectors, control shafts, etc. When the exposed metallic part has a return path to the chassis, the reading should be between 1 MΩ and 5.2 MΩ. When the exposed metal does not have a return path to the chassis, the reading must be infinity.

1.3. Leakage Current Hot Check (See Figure 1.)

1. Plug the AC cord directly into the AC outlet. Do not use an isolation transformer for this check.
2. Connect a 1.5 kΩ, 10 W resistor, in parallel with a 0.15 μF capacitor, between each exposed metallic part on the set and a good earth ground, as shown in Figure 1.
3. Use an AC voltmeter, with 1 kΩ/V or more sensitivity, to measure the potential across the resistor.
4. Check each exposed metallic part, and measure the voltage at each point.
5. Reverse the AC plug in the AC outlet and repeat each of the above measurements.
6. The potential at any point should not exceed 0.75 V RMS. A leakage current tester (Simpson Model 229 or equivalent) may be used to make the hot checks, leakage current must not exceed 1/2 mA. In case a measurement is outside of the limits specified, there is a possibility of a shock hazard, and the equipment should be repaired and rechecked before it is returned to the customer.

Hot-Check Circuit

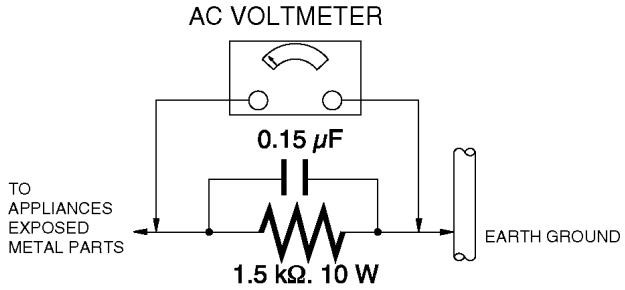

Figure. 1

1.4. How to Discharge the Capacitor on Flash PCB

CAUTION:

1. **Be sure to discharge the capacitor on FLASH PCB.**
2. **Be careful of the high voltage circuit on FLASH PCB when servicing.**

[Discharging Procedure]

1. Refer to the disassemble procedure and Remove the necessary parts/unit.
2. Put the insulation tube onto the lead part of Resistor (ERG5SJ102:1kΩ /5W).
   (an equivalent type of resistor may be used.)
3. Put the resistor between both terminals of capacitor on FLASH PCB for approx. 5 seconds.
4. After discharging confirm that the capacitor voltage is lower than 10V using a voltmeter.

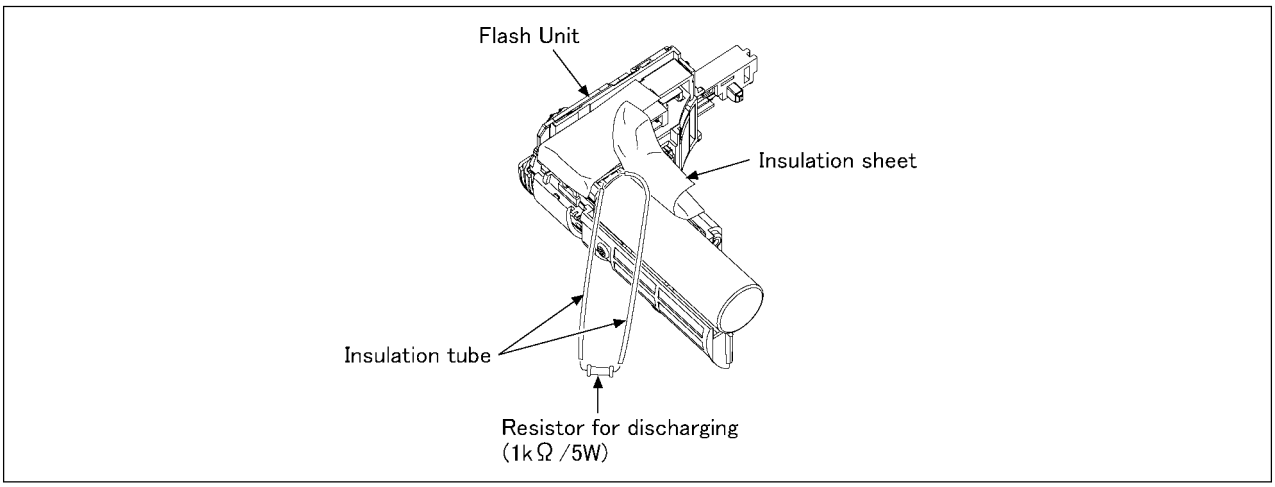

Fig. F1

2 Warning

2.1. Prevention of Electro Static Discharge (ESD) to Electrostatically Sensitive (ES) Devices

Some semiconductor (solid state) devices can be damaged easily by static electricity. Such components commonly are called Electrostatically Sensitive (ES) Devices. Examples of typical ES devices are integrated circuits and some field-effect transistors and semiconductor "chip" components. The following techniques should be used to help reduce the incidence of component damage caused by electro static discharge (ESD).

1. Immediately before handling any semiconductor component or semiconductor-equipped assembly, drain off any ESD on your body by touching a known earth ground. Alternatively, obtain and wear a commercially available discharging ESD wrist strap, which should be removed for potential shock reasons prior to applying power to the unit under test.
2. After removing an electrical assembly equipped with ES devices, place the assembly on a conductive surface such as aluminum foil, to prevent electrostatic charge buildup or exposure of the assembly.
3. Use only a grounded-tip soldering iron to solder or unsolder ES devices.
4. Use only an antistatic solder removal device. Some solder removal devices not classified as "antistatic (ESD protected)" can generate electrical charge sufficient to damage ES devices.
5. Do not use freon-propelled chemicals. These can generate electrical charges sufficient to damage ES devices.
6. Do not remove a replacement ES device from its protective package until immediately before you are ready to install it. (Most replacement ES devices are packaged with leads electrically shorted together by conductive foam, aluminum foil or comparable conductive material).
7. Immediately before removing the protective material from the leads of a replacement ES device, touch the protective material to the chassis or circuit assembly into which the device will be installed.
   CAUTION :
   Be sure no power is applied to the chassis or circuit, and observe all other safety precautions.
8. Minimize bodily motions when handling unpackaged replacement ES devices. (Otherwise harmless motion such as the brushing together of your clothes fabric or the lifting of your foot from a carpeted floor can generate static electricity (ESD) sufficient to damage an ES device).

2.2. How to Recycle the Lithium Ion Battery (U.S. Only)

ENGLISH

A lithium ion/polymer battery that is recyclable powers the product you have purchased. Please call 1-800-8-BATTERY for information on how to recycle this battery.

FRANÇAIS

L'appareil que vous vous êtes procuré est alimenté par une batterie au lithium-ion/polymère recyclable. Pour des renseignements sur le recyclage de la batterie, veuillez composer le 1-800-8-BATTERY.

2.3. Caution for AC Cord (For EB/GC/SG)

2.3.1. Information for Your Safty

IMPORTANT

Your attention is drawn to the fact that recording of pre-recorded tapes or discs or other published or broadcast material may infringe copyright laws.

WARNING

To reduce the risk of fire or shock hazard, do not expose this equipment to rain or moisture.

CAUTION

To reduce the risk of fire or shock hazard and annoying interference, use the recommended accessories only.

FOR YOUR SAFETY

DO NOT REMOVE THE OUTER COVER

To prevent electric shock, do not remove the cover. No user serviceable parts inside. Refer servicing to qualified service personnel.

2.3.2. Caution for AC Mains Lead

For your safety, please read the following text carefully.

This appliance is supplied with a moulded three-pin mains plug for your safety and convenience.
A 5-ampere fuse is fitted in this plug.
Should the fuse need to be replaced please ensure that the replacement fuse has a rating of 5 amperes and it is approved by ASTA or BSI to BS1362
Check for the ASRA mark or the BSI mark on the body of the fuse.

ASTA mark	BSI mark

If the plug contains a removable fuse cover you must ensure that it is refitted when the fuse is replaced.
If you lose the fuse cover, the plug must not be used until a replacement cover is obtained.
A replacement fuse cover can be purchased from your local Panasonic Dealer.

If the fitted moulded plug is unsuitable for the socket outlet in your home then the fuse should be removed and the plug cut off and disposed of safety.
There is a danger of severe electrical shock if the cut off plug is inserted into any 13-ampere socket.

If a new plug is to be fitted please observe the wiring code as shown below.
If in any doubt, please consult a qualified electrician.

2.3.2.1. Important

The wires in this mains lead are coloured in accordance with the following code:

Blue	Neutral
Brown	Live

As the colours of the wires in the mains lead of this appliance may not correspond with the coloured markings identifying the terminals in your plug, proceed as follows:

The wire which is coloured BLUE must be connected to the terminal in the plug which is marked with the letter N or coloured BLACK.

The wire which is coloured BROWN must be connected to the terminal in the plug which is marked with the letter L or coloured RED.

Under no circumstances should either of these wires be connected to the earth terminal of the three pin plug, marked with the letter E or the Earth Symbol.

Earth Symbol	⏚

2.3.2.2. Before Use

Remove the Connector Cover as follows.

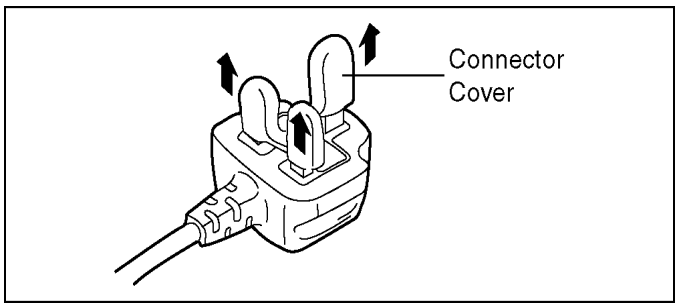

2.3.2.3. How to Replace the Fuse

1. Remove the Fuse Cover with a screwdriver.

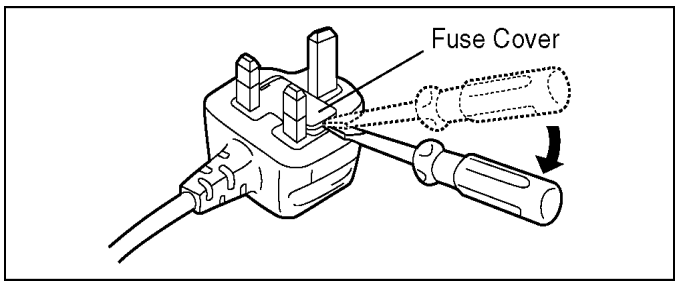

2. Replace the fuse and attach the Fuse cover.

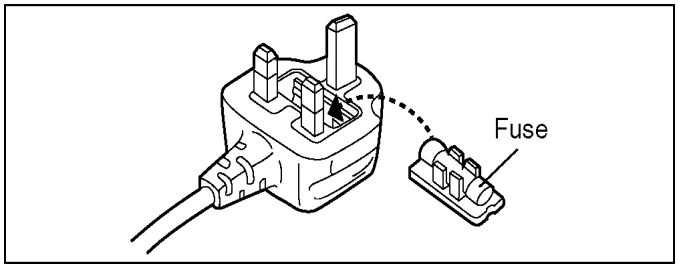

2.4. How to Replace the Lithium Battery

2.4.1. Replacement Procedure

1. Remove the Main PCB (Refer to Disassembly Procedures.)
2. Remove the Lithium battery (Ref. No. “Z001” at component side of Main PCB) and then replace it into new one.

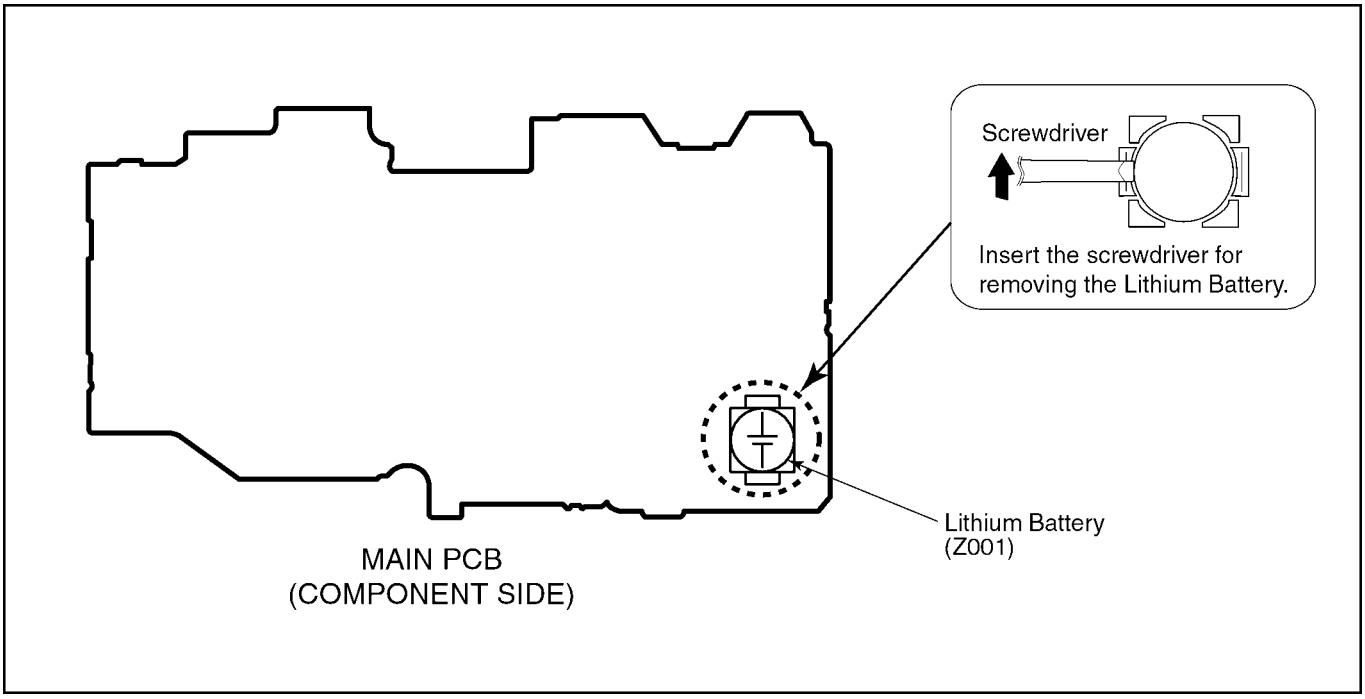

NOTE:

This Lithium battery is a critical component.
(Type No.: ML-421S/ZT **Manufactured by Matsushita Battery Industrial Co.,Ltd.**)
It must never be subjected to excessive heat or discharge.
It must therefore only be fitted in requirement designed specifically for its use.
Replacement batteries must be of same type and manufacture.
They must be fitted in the same manner and location as the original battery, with the correct polarity contacts observed.
Do not attempt to re-charge the old battery or re-use it for any other purpose.
It should be disposed of in waste products destined for burial rather than incineration.

(For English)

CAUTION

Danger of explosion if battery is incorrectly replaced.
Replace only with the same or equivalent type recommended by the manufacturer.
Dispose of used batteries according to the manufacturer's instructions.

(For French)

PRECAUTION

Le fait de remplacer incorrectement la pile peut présenter des risques d'explosion.
Remplacer la pile uniquement par une pile identique ou de type équivalent recommandée par le fabricant. Se débarrasser des piles usagées conformément aux instructions du fabricant.

(For German)

VORSICHT

Bei einer falsch eingesetzten Batterie besteht Explosionsgefahr. Nur mit einer vom Hersteller empfohlenen Batterie vom gleichen Typ ersetzen.
Verbrauchte Battrien beim Fachhändler oder einer Sammelstelle für Sonderstoffe abliefern.

(For Swedish)

VARNING

Explosionsfara vid felaktigt batteribyte.
Använd samma batterityp eller en ekvivalent typ som rekommenderas av apparattilverkaren.
Kassera använt batteri enligt fabrikantens instruktion.

(For Norwegian)

ADVARSEL!

Lithiumbatteri-Eksplosionsfare ved fejlagtig håndtering.
Udskiftning má kun ske med batteri af samme fabrikat og type.
Levér det brugte batteri tibage til leverandøren.

(For Finnish)

VAROITUS

Paristo voi räjähtää, jos se on virheellisesti asennettu.
Vaihda paristo ainoastaan laitevalmistajan suosittelemaan tyyppiin.
Hävitä käytetty paristo valmistajan ohjeiden mukaisesti.

NOTE:

Above caution is applicable for a battery pack which is for DMC-LX1 series, as well.

3 Service Navigation

3.1. Introduction

This service manual contains technical information, which allow service personnel's to understand and service this model.
Please place orders using the parts list and not the drawing reference numbers.

If the circuit is changed or modified, the information will be followed by service manual to be controlled with original service manual.

3.2. About Lead Free Solder (PbF)

Distinction of PbF PCB:

PCBs (manufactured) using lead free solder will have a PbF stamp on the PCB.

Caution:

- Pb free solder has a higher melting point than standard solder, Typically the melting point is 50-70°F (30-40°C) higher.
  Please use a high temperature soldering iron. In case of soldering iron with temperature control, please set it to 700±20°F (370±10°C).
- Pb free solder will tend to splash when heated too high (about 1100°F/600°C).

When soldering or unsoldering, please completely remove all of the solder on the pins or solder area, and be sure to heat the soldering points with the Pb free solder until it melts enough.

3.3. Important Notice 1:(Other than U.S.A. and Canadian Market)

1. The service manual does not contain the following information, because of the impossibility of servicing at component level.
   a. Schematic diagram, Block Diagram and PCB layout of Main PCB.
   b. Parts list for individual parts of Main PCB.
   When a part replacement is required for repairing Main PCB, replace as an assembled parts. (Main PCB)
2. The following category is/are recycle module part. please send it/them to Central Repair Center.
   - MAIN PCB (VEP56026A) : Excluding replacement of Lithium Battery

3.4. How to Define the Model Suffix (NTSC or PAL model)

There are seven kinds of DMC-LX1, regardless of the colours.

- a) DMC-LX1S
- b) DMC-LX1PP
- c) DMC-LX1EB/EG/EGM/GN
- d) DMC-LX1GC/SG
- e) DMC-LX1GD
- f) DMC-LX1GT
- g) DMC-LX1GK

(DMC-LX1S is exclusively Japan domestic model.)

What is the difference is that the “INITIAL SETTING” data which is stored in Flash ROM mounted on Main PCB.

3.4.1. Defining methods:

To define the model suffix to be serviced, refer to the nameplate which is putted on the bottom side of the Unit.

a) DMC-LX1S

DMC-LX1S is exclusively Japan domestic model.

b) DMC-LX1PP

The nameplate for this model show the following Safty registration mark.

c) DMC-LX1EB/EG/EGM/GN

The nameplate for these models show the following Safty registration mark.

d) DMC-LX1GC/SG

The nameplate for these models show the following Safty registration mark.

e) DMC-LX1GD

The nameplate for this model show the following Safty registration mark.

f) DMC-LX1GT

The nameplate for this model show the following Safty registration mark.

g) DMC-LX1GK

The nameplate for this model do not show any above Safty registration mark.

NOTE:

After replacing the MAIN PCB, be sure to achieve adjustment.

The adjustment instruction is available at “software download” on the “Support Information from NWBG-PAVC” web-site in “TSN system”, together with Maintenance software.

3.4.2. INITIAL SETTINGS:

CAUTION:

NEVER select “NONE(JAPAN)” if the unit is other than “JAPAN” model.
Other-wise, it can not be reset to the other.

When you replace the Main PCB be sure to perform the initial settings after achieving the Adjustment, by ordering the following procedure in accordance with model suffix.

- **Step 1. The temporary cancellation of factory setting:**
  Set the mode dial to “ [P]”.
  While keep pressing [Optical Image Stabilizer] and “[UP] of Cross key” simultaneously, turn the Power on.
- **Step 2. The cancellation of factory setting:**
  Set the mode dial to “[Playback]”.
  While keep pressing [Optical Image Stabilizer] and “[UP] of Cross key” simultaneously, turn the Power on.
- **Step 3. Turn the Power on:**
  Set the mode dial to “[P]”, and then turn the Power on.
- **Step 4. Display the INITIAL SETTING:**
  While keep pressing [MENU] and “[RIGHT] of Cross key” simultaneously, turn the Power off.

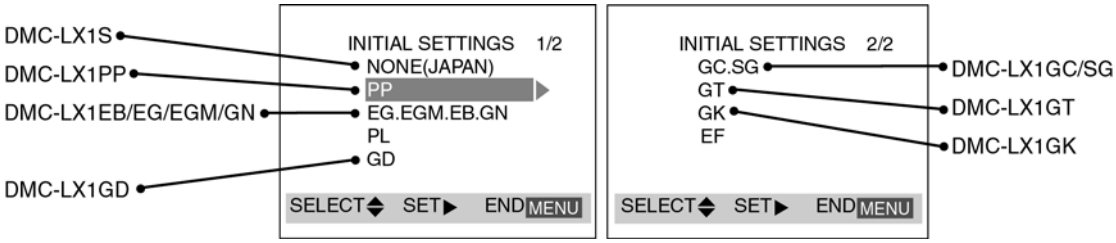

- **Step 5. Set the INITIAL SETTING:**
  Select the area with pressing “[UP] / [DOWN] of Cross key”, and then press the “[RIGHT] of Cross key”.

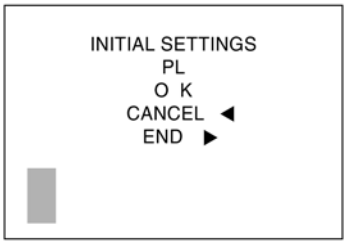

  The only set area is displayed, and then press the “[RIGHT] of Cross key” after confirmation.
  (The unit is powered off automatically.)
  Confirm the display of “PLEASE SET THE CLOCK” in English when the unit is turned on again.
- **Step 6. CONFIRMATION:**
  The display shows “PLEASE SET THE CLOCK” when turn the Power on again.
  Connect the unit to PC with USB cable and is detected as removable media.
  (For China and Taiwan marker, the display shows “PLEASE SET THE CLOCK” in Chinese.)

1) As for your reference Default setting condition is given in the following table.

- **Default setting (After “INITIAL SETTINGS”)**

	MODEL	VIDEO OUTPUT	LANGUAGE	DATE	REMARKS
a)	DMC-LX1S	NTSC	Japanese	Year/Month/Date	
b)	DMC-LX1PP	NTSC	English	Month/Date/Year	
c)	DMC-LX1EB/EG/EGM/GC/GN/SG	PAL	English	Date/Month/Year	
d)	DMC-LX1GK	PAL	Chinese (simplified)	Year/Month/Date	
e)	DMC-LX1GT	NTSC	Chinese (traditional)	Year/Month/Date	
f)	DMC-LX1GD	NTSC	English	Year/Month/Date	

4 Specifications

Digital Camera:	Information for your safety
Power Source:	DC 5.1 V
Power Consumption:	2.1 W (When recording) 1.0 W (When playing back)
Camera Effective pixels:	8,400,000 pixels
Image sensor:	1/1.65" CCD, total pixel number 8,610,000 pixels Primary color filter
Lens:	Optical 4× zoom, f=6.3 to 25.2 mm [35 mm film camera equivalent: 28 to 112 mm (aspect ratio [16:9])]/F2.8 to F4.9
Digital zoom:	Max. 4×
Extended optical zoom:	In [16:9] aspect : Up to 5× In [3:2] aspect : Up to 5.1× In [4:3] aspect : Up to 5.6× (Any resolution except the maximum for the selected aspect ratio)
Focus:	Normal/Macro/Manual 9-area-focusing/3-area-focusing (high speed)/1-area-focusing (high speed)/1-area-focusing/Spot-focusing
Focus range:	Normal AF: 1.64 feet (50 cm) (Wide)/3.94 feet (120 cm) (Tele) to ∞ Macro: 0.16 feet (5 cm) (Wide)/0.98 feet (30 cm) (Tele) to ∞
Shutter system:	Electronic shutter+Mechanical shutter
Shutter speed:	60 to 1/2,000th
Burst recording	
Burst speed (max.):	3 frames/second (high speed), 2 frames/second (low speed), 2 frames/second (unlimited)
Number of recordable pictures (max.):	9 frames (standard), 5 frames (fine), Depends on the capacity of the card. (unlimited) (Performance in burst recording is only with SD Memory Card. MultiMediaCard performance will be less.)
Motion picture recording:	Aspect ratio [16:9]:848×480 pixels (30 or 10 frames/second with audio) Aspect ratio [4:3]:320×240 pixels, 640×480 pixels (30 or 10 frames/second with audio) (The maximum recording time depends on the capacity of the card.)
ISO sensitivity:	AUTO/80/100/200/400
White balance:	AUTO/Daylight/Cloudy/Halogen/White set 1/White set 2
Exposure (AE):	Program AE Exposure compensation (1/3 EV Step, –2 to +2 EV)
Metering mode:	Multiple/Center weighted/Spot
LCD monitor:	Low-temperature polycrystalline TFT LCD 2.5" (Approx. 207,000 pixels) (field of view ratio about 100%)
Flash:	Flash range: (ISO AUTO) Approx. 1.97 feet (60 cm) to 13.5 feet (4.1 m) AUTO, AUTO/Red-eye reduction, Forced ON (Forced ON/Red-eye reduction), Slow sync./Red-eye reduction, Forced OFF
Microphone:	Monaural
Speaker:	Monaural
Recording media:	SD Memory Card/MultiMediaCard
Picture size:	
Still picture:	Aspect ratio [16:9]: 3840×2160 pixels, 3072×1728 pixels, 1920×1080 pixels Aspect ratio [3:2]: 3248×2160 pixels, 2560×1712 pixels, 2048×1360 pixels Aspect ratio [4:3]: 2880×2160 pixels, 2304×1728 pixels, 2048×1536 pixels, 1600×1200 pixels, 1280×960 pixels
Motion picture:	Aspect ratio [16:9]: 848×480 pixels Aspect ratio [4:3]: 640×480 pixels, 320×240 pixels
Quality:	TIFF/Fine/Standard/RAW
Recording file format	
Still Picture:	JPEG (Design rule for Camera File system, based on Exif 2.2 standard)/DPOF compliant
Picture with audio:	JPEG (Design rule for Camera File system, based on Exif 2.2 standard)+QuickTime (picture with audio)
Motion pictures:	QuickTime Motion JPEG (audio recordable)
Interface	
Digital:	USB 2.0 (Full Speed)
Analog video/audio:	NTSC/PAL Composite (Switched by menu), Audio line output (monaural)
Terminal	
AV OUT/DIGITAL:	AV/USB Dedicated jack (8 pin)
DC IN:	Dedicated jack (2 pin)
Dimensions:	4 1/8"(W) × 2 1/4"(H) × 1"(D) (105.7 mm (W)×55.8 mm (H)×25.6 mm (D)) (excluding the projection part)
Weight:	Approx. 6.50 oz/185 g (excluding Memory Card, battery and Lens Cap) Approx. 7.80 oz/220 g (with Memory Card, battery and Lens Cap)
Operating Temperature:	32 °F to 104 °F (0 °C to 40 °C)
Operating Humidity:	10 % to 80 %
Battery Charger:	Information for your safety
Input:	110 to 240 V ~ 50/60 Hz, 0.2 A
Output:	CHARGE 4.2 V⎓0.8 A
Equipment mobility:	Movable
Battery Pack (lithium-ion) (Panasonic CGA-S005A):	Information for your safety
Voltage/capacity:	3.7 V, 1150 mAh

5 Location of Controls and Components

Names of the Components

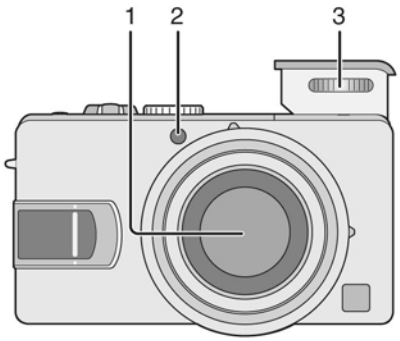

1 Lens part
2 Self-timer Indicator
AF Assist Lamp
3 Flash

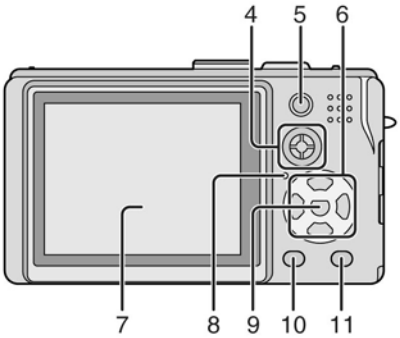

4 Joystick
5 AF/AE Lock Button
6 Cursor buttons
◀/Self-timer Button
▼/[REV] Button
▶/Flash Mode Button
▲/Backlight Compensation in Auto Mode/Exposure Compensation /Auto Bracket/White Balance Fine Adjustment Button
7 LCD Monitor
8 Status Indicator
9 [MENU] Button
10 [DISPLAY/PWR LCD] Button
11 Single/Burst Mode/Delete Button

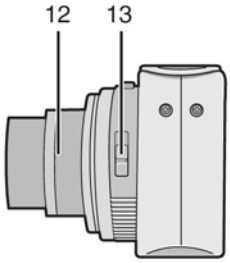

12 Lens barrel
13 Focus switch

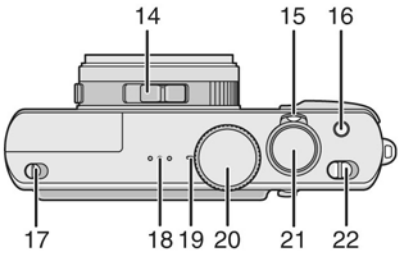

14 Aspect ratio switch
15 Zoom Lever
16 Optical Image Stabilizer Button
17 Flash Open Switch
18 Speaker
19 Microphone
20 Mode Dial
21 Shutter Button
22 Camera Switch

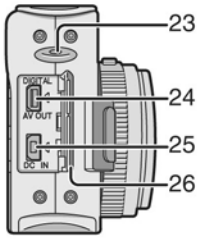

23 Lens Cap/Strap Eyelet
24 [DIGITAL/AV OUT] Socket
25 [DC IN] Socket
- Please be sure to use genuine Panasonic AC adaptor (DMW-AC5; optional).
- This camera cannot charge the battery even though the AC adaptor (DMW-AC5; optional) is connected to it.

26 Terminal Cover

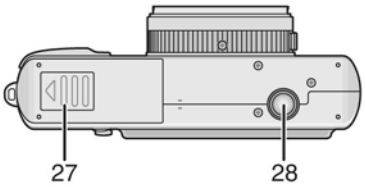

27 Card/Battery Door
28 Tripod Receptacle
- When you use a tripod, make sure the tripod is stable with the camera attached to it.

■ **The Mode Dial**

This camera has a mode dial to suit for recording of many kinds of scenes.
Select the desired mode and enjoy the variety of recording.
Rotate the mode dial slowly and securely.

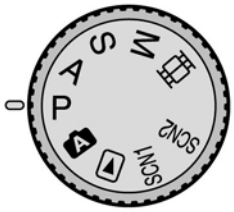

P : Program AE mode
The exposure is automatically adjusted by the camera.

A : Aperture-priority AE
The shutter speed is automatically determined by the aperture value you set.

S : Shutter-priority AE
The aperture value is automatically determined by the shutter speed you set.

M : Manual exposure
The exposure is adjusted by the aperture value and the shutter speed which are manually adjusted.

: Motion picture mode
This mode allows you to record motion pictures with audio.

SCN1 : Scene mode 1
SCN2 : Scene mode 2
This mode allows you to take pictures depending on the recording scenes.
This mode also allows you to set [SCENE MENU] (P26) on the [SETUP] menu to [OFF] and set the scene modes which are frequently used to [SCN1] and [SCN2] on the mode dial.
It is convenient because you can select the scene mode quickly and minimize the operation.

: Auto mode
This is the recommended mode for beginners.

: Playback mode
This mode allows you to play back recorded pictures.

6 Service Mode

6.1. Error Code Memory Function

1. **General description**
   This unit is equipped with history of error code memory function, and can be memorized 32 error codes in sequence from the latest. When the error is occurred more than 32, oldest error is overwritten in sequence.
   The error code is not memorized when the power supply is shut down forcibly (when the unit is powered on by the battery, the battery is pulled out) because the error code is memorized to FLASH ROM when the unit is powered off.
2. **How to display**
   The error code can be displayed by the following procedure:
   Before perform the error code memory function, connect the AC adaptor or insert the battery, and insert the SD card.

- **1. The temporary cancellation of factory setting:**
  Set the mode dial to “[P]”.
  While pressing [Optical Image Stabilizer Button] and “[UP] of Cross key” simultaneously and hold them, turn the Power on.
- **2. The display of error code:**
  Press [Optical Image Stabilizer Button], [MENU] and “[LEFT] of Cross key” simultaneously with the step 1 condition.
  The display is changed as shown below when the above buttons is pressed simultaneously.
  Normal display → Error code display → Operation history display → Normal display → .....

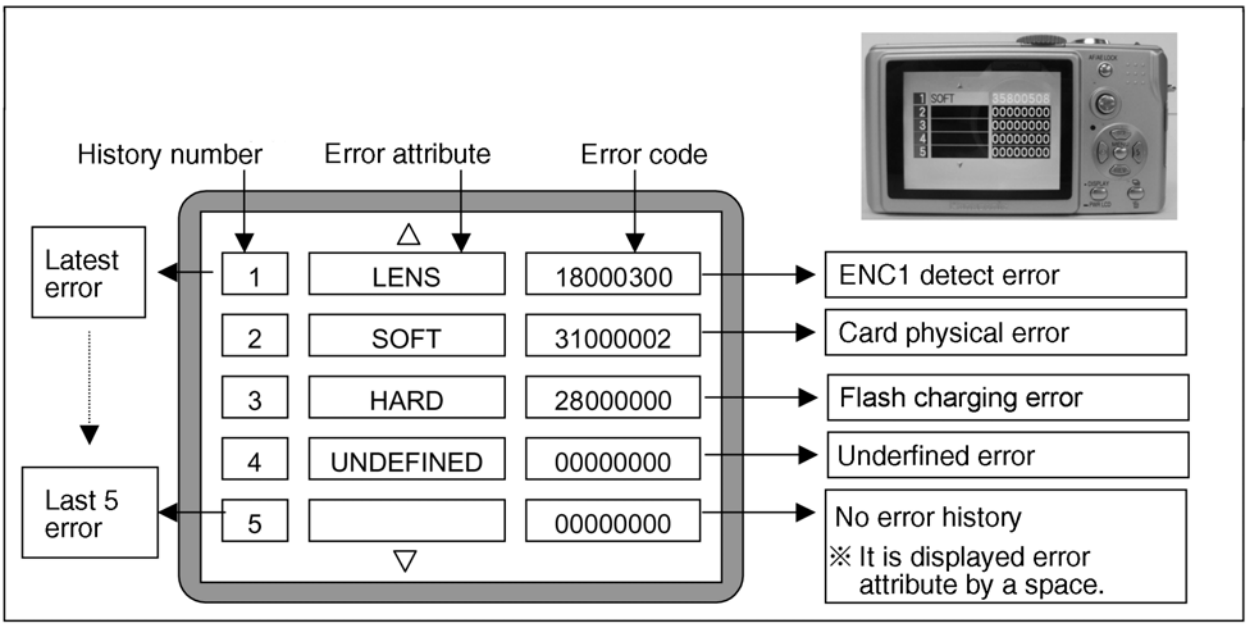

Example of Error Code Display

- **3. The change of display:**
  The error code can be memorized 32 error codes in sequence, however it is displayed 5 errors on the LCD.
  Display can be changed by the following procedure:
  “[UP] or [DOWN] of Cross key” : It can be scroll up or down one.
  “[LEFT] or [RIGHT] of Cross key” : It can be display last 5 error or another 5 error.
- **4. How to read the error code:**
  One error code is displayed for 8 bit, the contents of error codes is indicated the table as shown below.

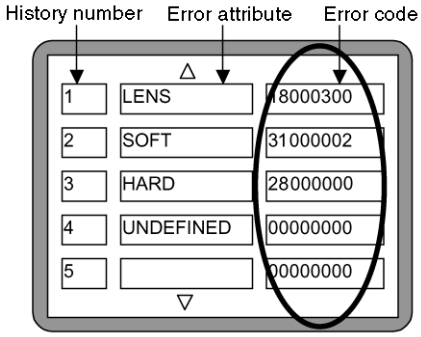

Attribute	Main item	Sub item	Error code		Contents (Upper)
			High 4 bits	Low 4 bits	Check point (Lower)
LENS	Lens drive	OIS	1800	1000	PSD (X) error. Hall element (X axis) position detect error in OIS unit.
					OIS Unit
				2000	PSD (Y) error. Hall element (Y axis) position detect error in OIS unit.
					OIS Unit
				3000	GYRO (X) error. Gyro (IC7102: X axis) detect error on Main C.B.A..
					IC7102 (Gyro element) or IC6001 (VENUS 2)
				4000	GYRO (Y) error. Gyro (IC7101: Y axis) detect error on Main C.B.A..
					IC7101 (Gyro element) or IC6001 (VENUS 2)
				5000	MREF error (Reference voltage error).
					IC7002 (LENS drive) or IC6001 (VENUS 2)
				6000	Drive voltage (X) error.
					VENUS 2 AD value error, LENS Unit, LENS flex breaks etc.
				7000	Drive voltage (Y) error.
					VENUS 2 AD value error, LENS Unit, LENS flex breaks etc.
		C.B./Zoom		0100	HP Low detect error (C.B. encoder (full retract) always Low detect).
					FP9001-(30) signal line or IC6001 (VENUS 2)
				0200	HP High detect error (C.B. encoder (full retract) always High detect).
					FP9001-(30) signal line or IC6001 (VENUS 2)
				0300	ENC1 detect error (C.B. motor encoder detect error).
					FP9001-(5) signal line or IC6001 (VENUS 2)
				0400	ENC2 detect error (C.B. motor encoder detect error).
					FP9001-(3) signal line or IC6001 (VENUS 2)
		Zoom		0010	HP Low detect error (Zoom encoder always Low detect error).
					FP9001-(3,5) signal line or IC6001 (VENUS 2)
				0020	HP High detect error (Zoom encoder always High detect error).
					FP9001-(3,5) signal line or IC6001 (VENUS 2)
				0030	ENC1 detect error (Zoom encoder detect error).
					FP9001-(5) signal line or IC6001 (VENUS 2)
				0040	ENC2 detect error (Zoom encoder detect error).
					FP9001-(3) signal line or IC6001 (VENUS 2)
		Focus		0001	HP Low detect error (Focus encoder always Low detect error).
					FP9001-(30) signal line or IC6001 (VENUS 2)
				0002	HP High detect error (Focus encoder always High detect error).
					FP9001-(30) signal line or IC6001 (VENUS 2)
				0003	MR A aspect output error
				0004	MR B aspect output error
		Lens	1801	0000	Power ON time out error.
					Lens drive system
			1802	0000	Power OFF time out error.
					Lens drive system
	Adj.History	OIS	1900	2000	OIS adj. Yaw direction amplitude error (small)
				3000	OIS adj. Pit direction amplitude error (small)
				4000	OIS adj. Yaw direction amplitude error (large)
				5000	OIS adj. Pit direction amplitude error (large)
				6000	OIS adj. MREF error
				7000	OIS adj. time out error
				8000	OIS adj. Yaw direction off set error
				9000	OIS adj. Pit direction off set error
				A000	OIS adj. Yaw direction gain error
				B000	OIS adj. Pit direction gain error
				C000	OIS adj. Yaw direction position sensor error
				D000	OIS adj. Pit direction position sensor error
				E000	OIS adj. other error
HARD	VENUS A/D	Flash	2800	0000	Flash charging error.
					IC6001-(13) signal line or Flash charging circuit
	FLASH ROM (EEPROM Area)	FLASH ROM (EEPROM Area)	2B00	0001	EEPROM read error
					IC6002 (FLASH ROM)
				0002	EEPROM write error
					IC6002 (FLASH ROM)
	SYSTEM	RTC	2C00	0001	SYSTEM IC initialize failure error
					Communication between IC6001 (VENUS 2) and IC9101 (SYSTEM)

Attribute	Main item	Sub item	Error code		Contents (Upper)
			High 4 bits	Low 4 bits	Check point (Lower)
SOFT	CPU	Reset	3000	0001 | 0007	NMI reset Non Mask-able Interrupt (30000001-30000007 are caused by factors)
	Card	Card	3100	0001	Card logic error
					SD card data line or IC6001 (VENUS 2)
				0002	Card physical error
					SD card data line or IC6001 (VENUS 2)
				0004	Write error
					SD card data line or IC6001 (VENUS 2)
				0005	Format error
					SD card data line or IC6001 (VENUS 2)
	CPU, ASIC hard	Stop	3800	0001	Camera task finish process time out.
					Communication between Lens system and IC6001 (VENUS 2)
				0002	Camera task invalid code error.
					IC6001 (VENUS 2)
				0100	File time out error in recording motion image
					IC6001 (VENUS 2)
				0200	File data send error in recording motion image
					IC6001 (VENUS 2)
		Monitor		1000	AF frame movement check time out.
					IC6001 (VENUS 2)
	Operation	Power on	3B00	0000	FLASHROM processing early period of camera during movement.
	Zoom	Zoom	3C00	0000	I do not complete zoom lens processing
					Zoom lens
			3500	0000	I jumped into dummy processing
					(0-7bit : command, 8-15bit : Status)
			3502	0000	Though record preprocessing is necessary, it is not called.
			3503	0000	Though record preprocessing is necessary, it is not completed.

- **5. How to returned to Normal Display:**

  Turn the power off and on, to exit from Error code display mode.

  NOTE:

  The error code can not be initialized by the unit only.

6.2. Confirmation of Firmware Version

The Firmware version can be confirmed by ordering the following steps:.

- **Step 1. The temporary cancellation of factory setting:**
  Set the mode dial to “[P]”.
  While keep pressing [Optical Image Stabilizer] and “[UP] of Cross key” simultaneously. turn the power on with inserting the SD memory card which has a few photo data.
- **Step 2. Confirm the version:**
  Set the mode dial to “[Playback]” and then press [DISPLAY] to switch to LCD with indication. (Fig. A)
  Press [Optical Image Stabilizer] and “[DOWN] of Cross key” simultaneously. (No need to keep pressing.)
  (The version information is displayed on the LCD with light blue colour letters.) (Fig. B)

CAUTION:

The version information does not display if the LCD has switched to LCD with indication already.
In this case, press [DISPLAY] to switch to LCD with indication.

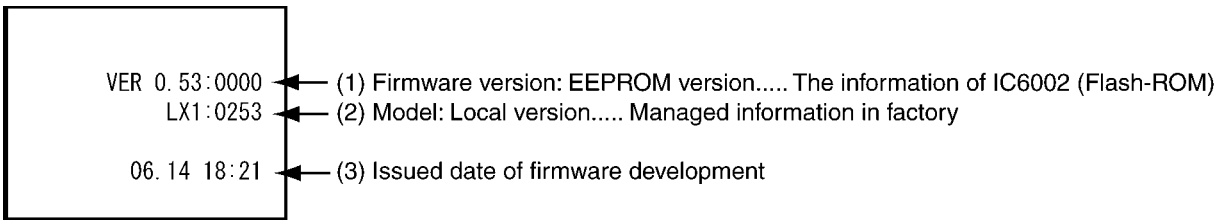

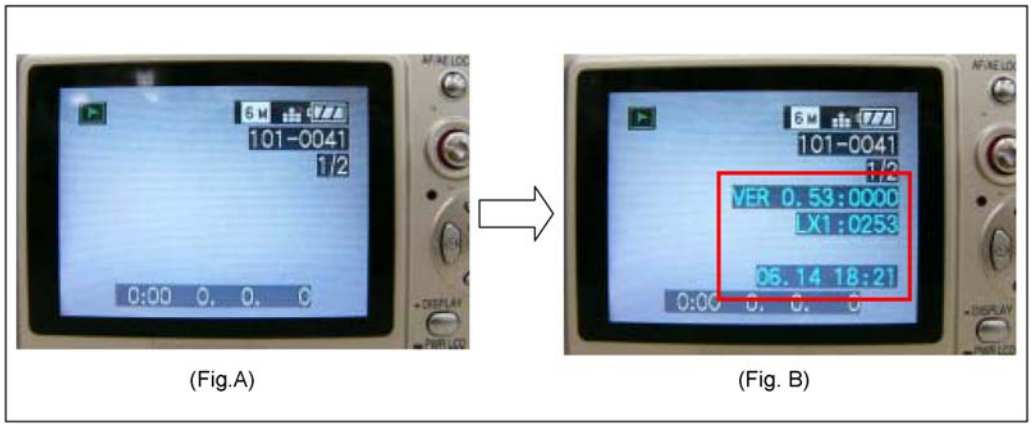

(Fig.A) (Fig. B)

<Point>

- The firmware version and EEPROM version can be confirmed with the information (1).
- The information (2), (3) are just reference.

7 Service Fixture & Tools

7.1. Service Fixture and Tools

The following Service Fixture and tools are used for checking and servicing this unit.

Resistor for Discharging ERG5SJ102	**Infinity Lens (with Focus Chart)** VFK1164TCM02	**LIGHT BOX** VFK1164TDVLB
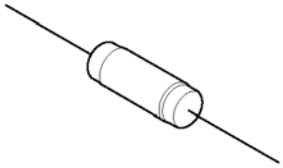 An equivalent type of Resistor may be used.	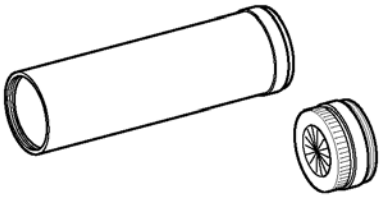	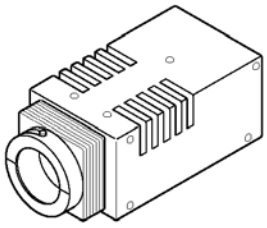 ※ with DC Cable
TR Chart VFK1975	**Lens Cleaning Kit (BK)** VFK1900BK	**Grease (for lens)** VFK1829
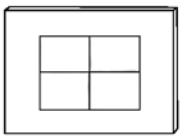	* Only supplied as 10 set/box.	
Furoyl grease (for focus motor) VFK1850	**T3 Trox Driver** VFK1755	
	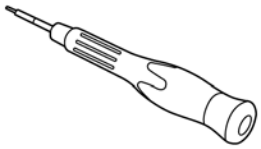	

7.2. When Replacing the Main PCB

After replacing the MAIN PCB, be sure to achieve adjustment.

The adjustment instruction is available at “software download” on the “Support Information from NWBG-PAVC” web-site in “TSN system”, together with Maintenance software.

7.3. Service Position

This Service Position is used for checking and replacing parts. Use the following Extension cables for servicing.

Table S1 Extension Cable List

No.	Parts No.	Connection	Form
1	VFK1951	FP9001 (MAIN) - LENS FPC	39PIN 0.3 FFC
2	VFK1480	FP9002 (MAIN) - AFMF-ASPECT FPC	6PIN 0.5 FFC
3	VFK1976	FP9003 (MAIN) - LCD FPC	19PIN 0.5 FFC
4	VFK1974	FP9004 (MAIN) - BACKLIGHT FPC	4PIN 0.5 FFC
5	VFK1950	FP9005 (MAIN) - CCD FPC	33PIN 0.3 FFC
6	VFK1582A1225	FP9006 (MAIN) - FP8001 (FLASH)	12PIN 0.5 FFC
7	VFK1576DSC04	P9001 (MAIN) - AF ASSIST PCB	2PIN CABLE
8	VFK1870	PP9001 (MAIN) - PP9901 (TOP OPERATION)	30PIN B to B
9	VFK1576DSC03	P8001 (FLASH) - FLASH UNIT	2PIN CABLE
10	VFK1576DC202	P8002 (FLASH) - FLASH UNIT	2PIN CABLE

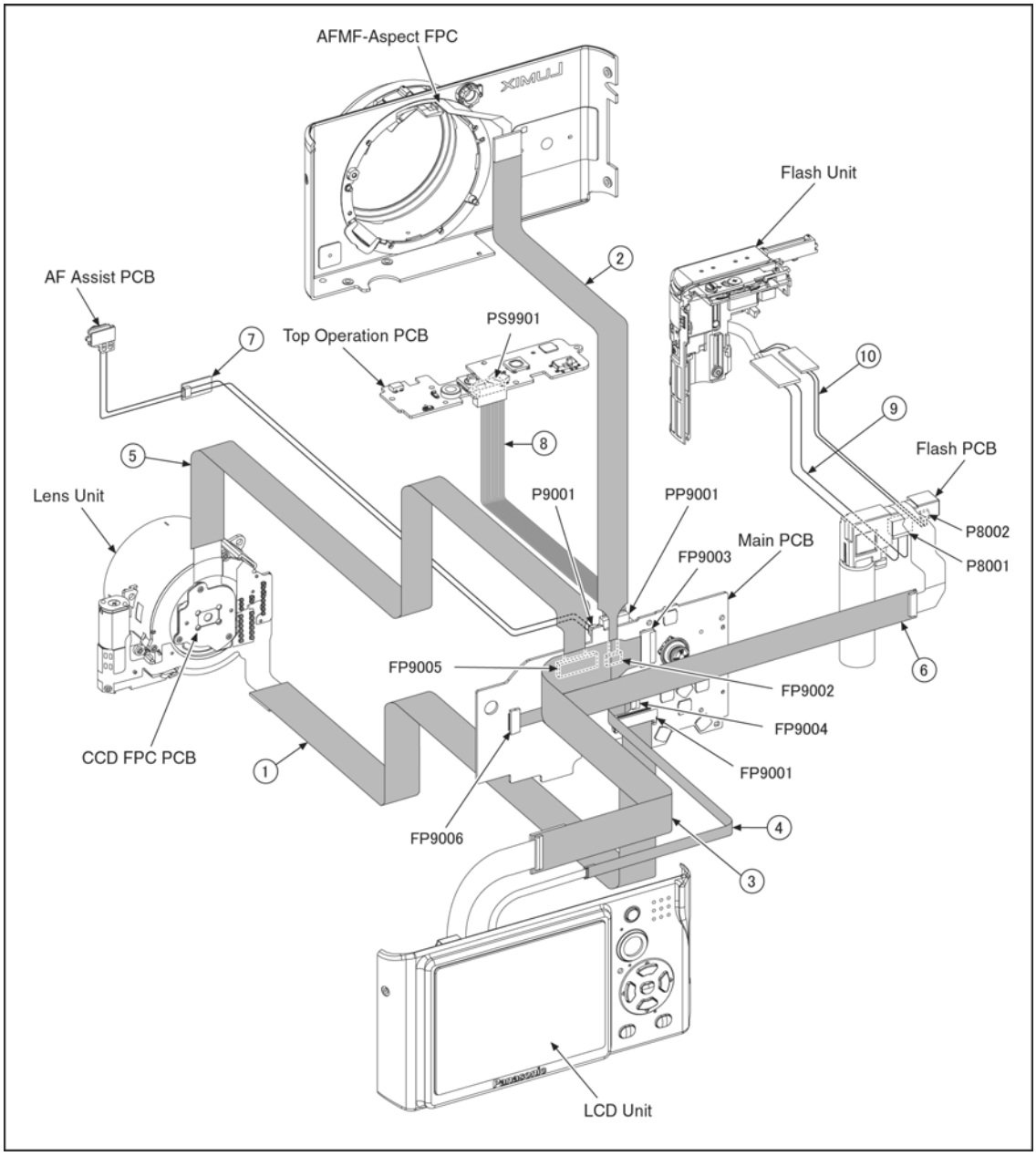

CAUTION-1. (When servicing FLASH PCB)

1. Be sure to discharge the capacitor on FLASH PCB.
   Refer to “How to Discharge the Capacitor on Flash PCB”.
   The capacitor voltage is not lowered soon even if the AC Cord is unplugged or the battery is removed.
2. Be careful of the high voltage circuit on FLASH PCB.
3. DO NOT allow other parts to touch the high voltage circuit on FLASH PCB.

8 Disassembly and Assembly Instructions

8.1. Disassembly Flow Chart

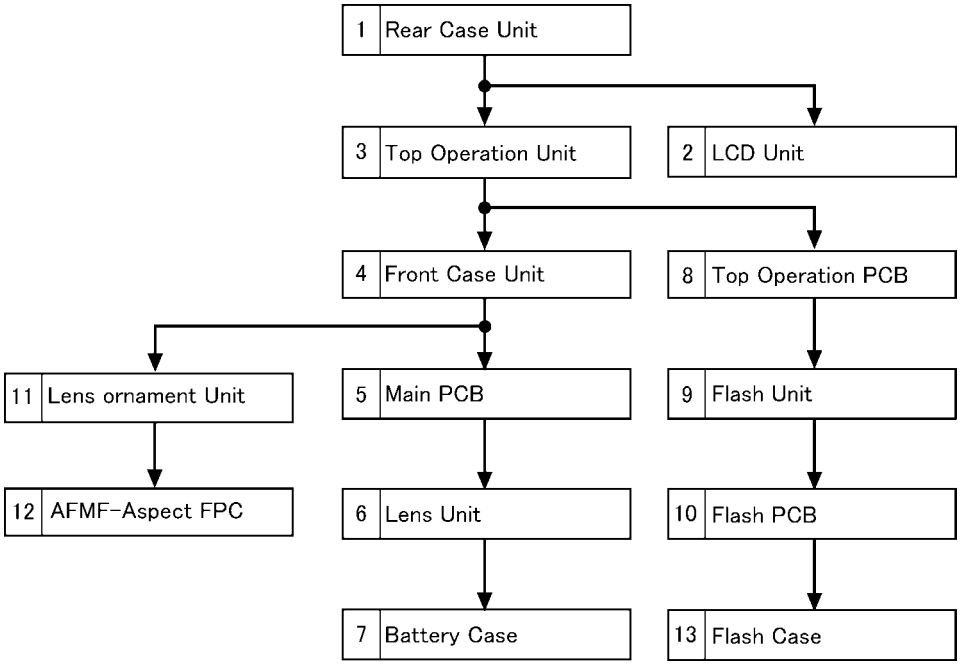

8.2. PCB Location

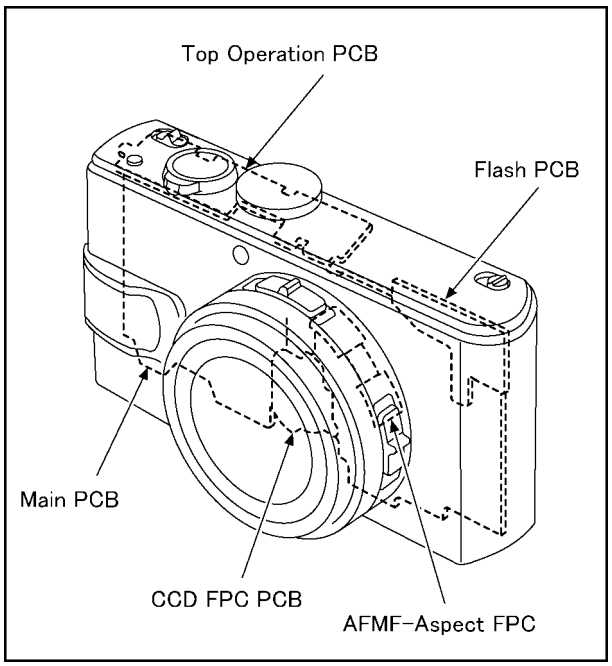

8.3. Disassembly Procedure

No.	Item	Fig	Removal
1	Rear Case Unit	Fig. D1	Card
			Battery
			3 Screws (A)
			1 Screw (B)
			FP9003(Flex)
			FP9004(Flex)
			Rear Case Unit
2	LCD Unit	Fig. D2	LCD Unit
3	Top Operation Unit	Fig. D3	1 Screw (C)
			1 Screw (D)
			FP9006(Flex)
			Capton Tape
			Top Operation Unit
4	Front Case Unit	Fig. D4	FP9002(Flex)
			2 Screws (E)
			1 Screw (F)
			3 Screws (G)
			Front Case Unit
5	Main PCB	Fig. D5	2 Screws (H)
			Jack Door unit
			FP9001(Flex)
			FP9006(Flex)
			P9001(Connector)
			1 Locking tab
			Main PCB
6	Lens Unit	Fig. D6	1 Locking tab
			Lens Unit
7	Battery Case	Fig. D7	1 Screw (I)
			3 Locking tabs
			Strap Holder
			Battery Case
8	Top Operation PCB	Fig. D8	4 Screws (J)
			Top Operation PCB
9	Flash Unit	Fig. D10	1 Screw (K)
			1 Locking tab
			Nut Plate
			Flash Unit
10	Flash PCB	Fig. D11	P8001(Connector)
			P8002(Connector)
			2 Locking tabs
			Flash PCB
11	Lens Ornament Unit	Fig. D12	3 Screws (L)
			Lens Ornament Unit
12	AF-MF Aspect FPC	Fig. D13	2 Screws (M)
			AS Click Spring
			AF Click Spring
			2 Focus Knobs
			2 Focus Sheets
		Fig. D14	1 Screw (N)
			Lens Frame
			2 Screws (O)
			AF-MF Aspect FPC

8.3.1. Removal of the Rear Case Unit

NOTE:
When servicing and disassembling, remove the card and battery from the unit.

- Card
- Battery
- Screw (A) × 3
- FP9003 (Flex)
- FP9004 (Flex)
- Screw (B) × 1

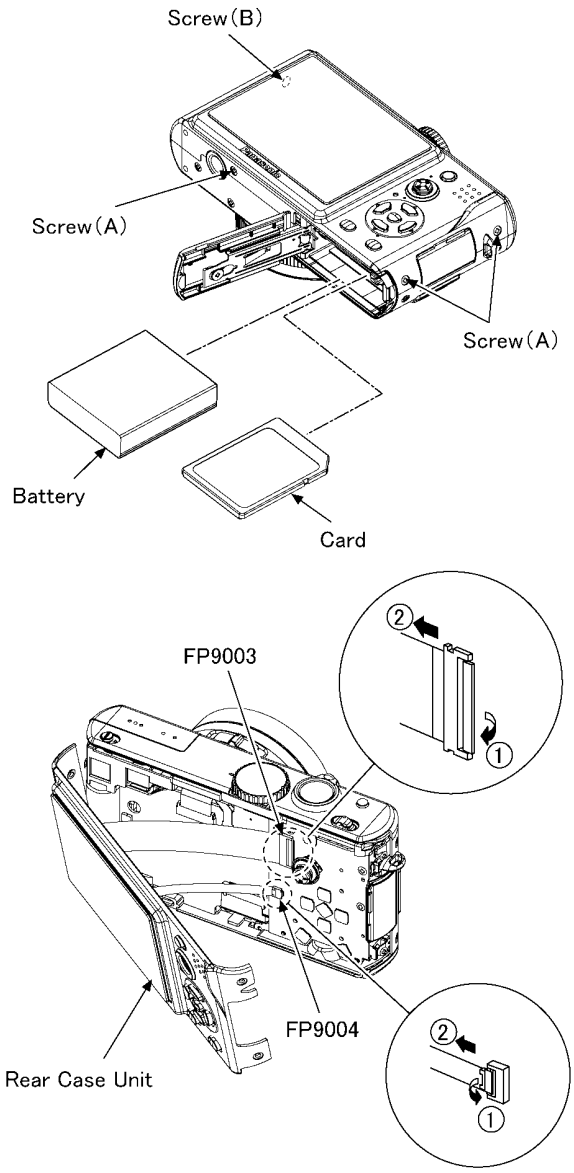

NOTE :(When Replacing)
Remove a FPC in the direction of an arrow ② after opening a cover in the arrow ① direction.

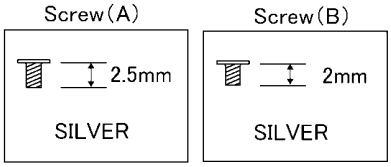

Fig. D1

8.3.2. Removal of the LCD Unit

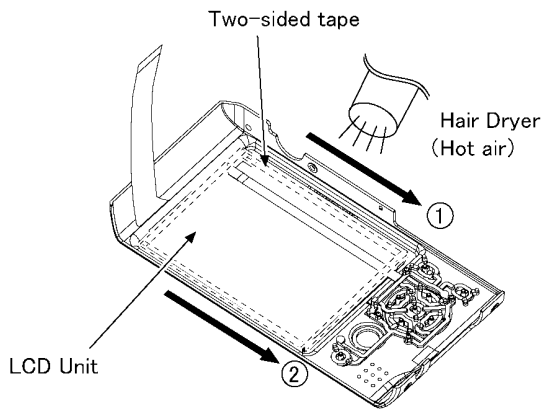

NOTE:(When Replacing)

- LCD unit is taped to rear case by two-sided tape.
- It can be easy to remove the two-sided tape with sending hot air by hair dryer.
- Insert the flathead screwdriver between LCD unit and rear case unit, and then remove the two-sided tape in the direction of arrow.
  (Removing order : ① → ②)
- Note that neither garbage nor the fingerprint adhere surface of LCD and rear case panel inside.

NOTE:(When installing)

- Install the LCD unit to the indicated position of rear case as shown below with confirming the surface of LCD.

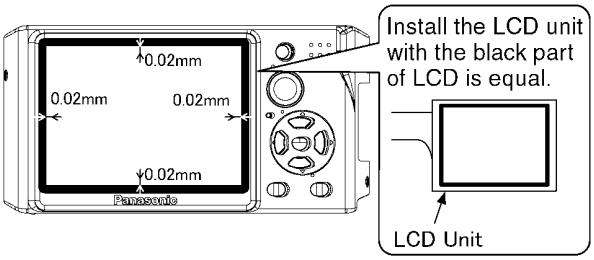

Fig. D2

8.3.3. Removal of the Top Operation Unit

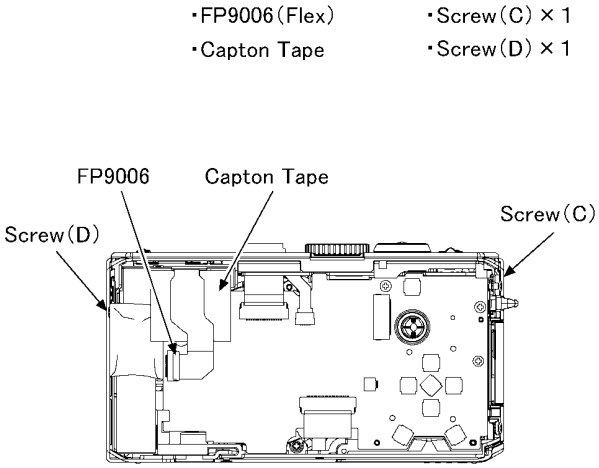

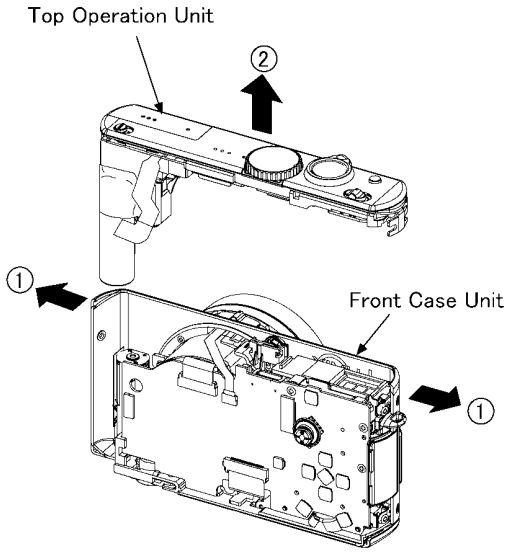

NOTE: (When Replacing)

- Extend both the sides of a front case unit loosely in the arrow ① direction, and remove a top operation unit in the arrow ② direction.

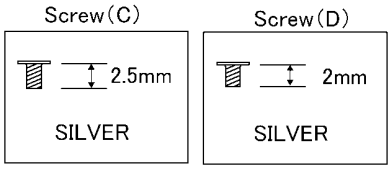

Fig. D3

8.3.4. Removal of the Front Case Unit

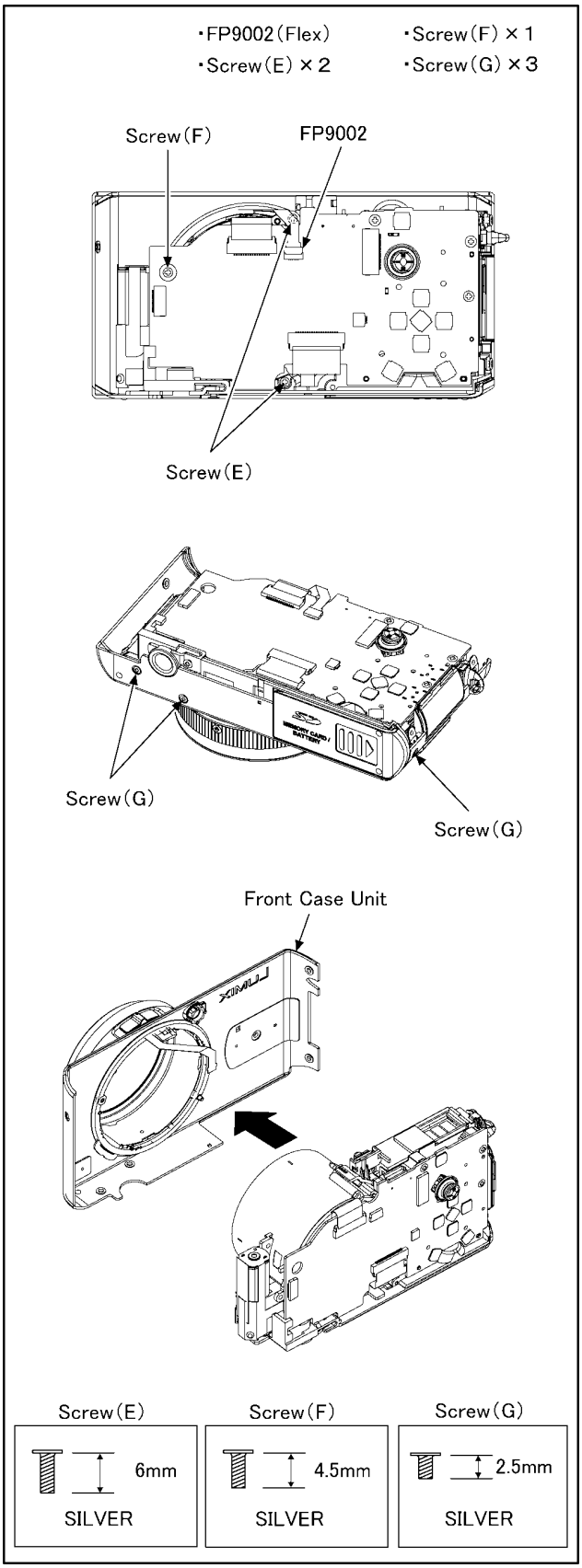

Fig. D4

8.3.5. Removal of the Main PCB

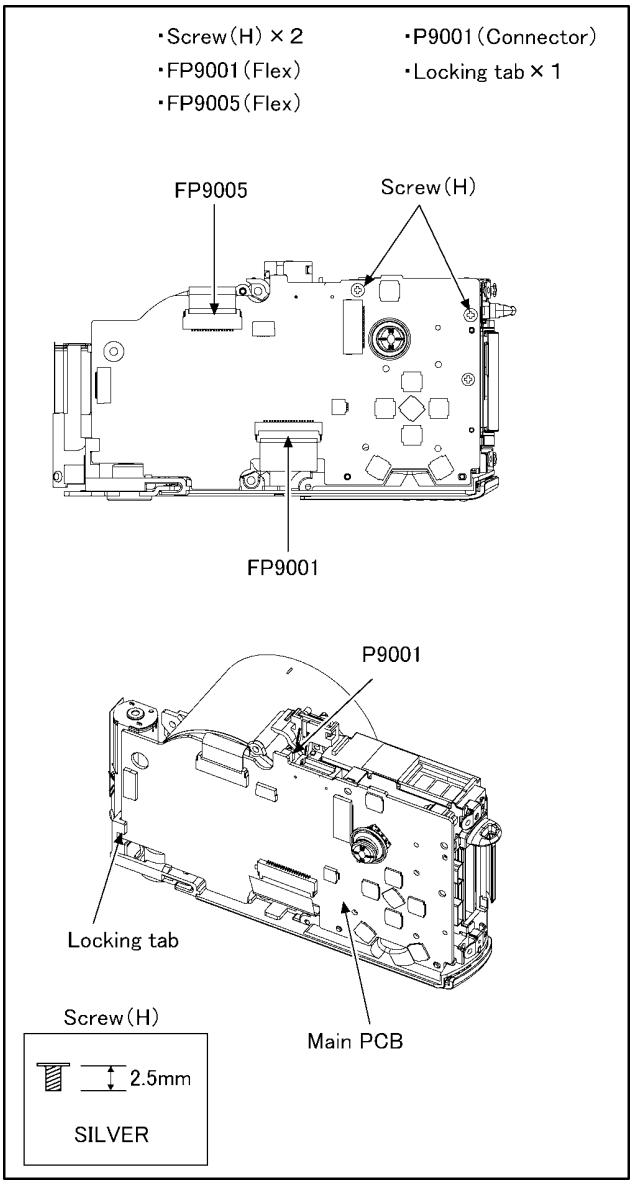

Fig. D5

8.3.6. Removal of the Lens Unit

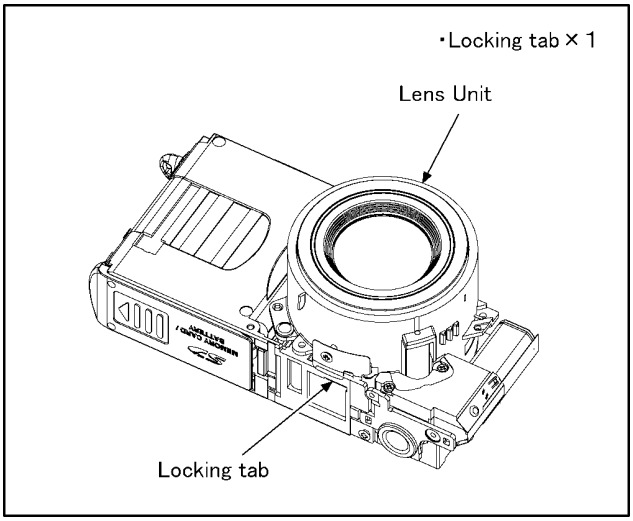

Fig. D6

8.3.7. Removal of the Battery Case

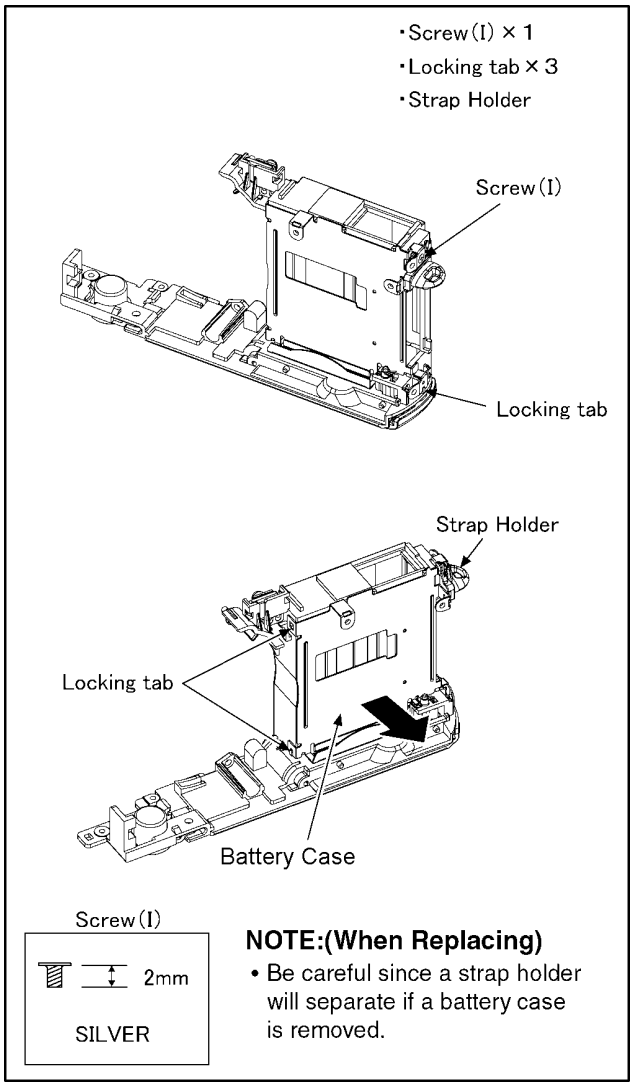

Fig. D7

8.3.8. Removal of the Top Operation PCB

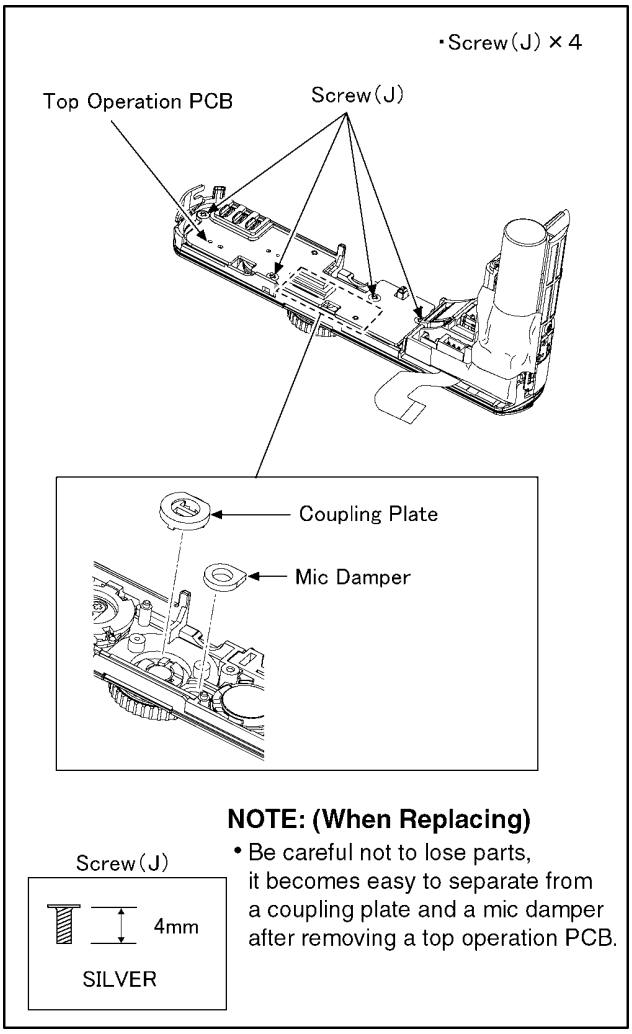

Fig. D8

NOTE: (When installing)

- Install the switch's boss and a power knob.
- Match a <D cut> part of a mode dial with a <D cut> part of coupling plate and install it.

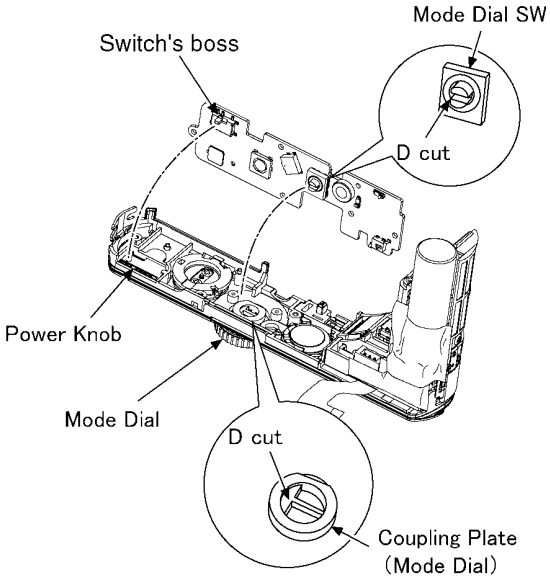

Fig. D9

8.3.9. Removal of the Flash Unit

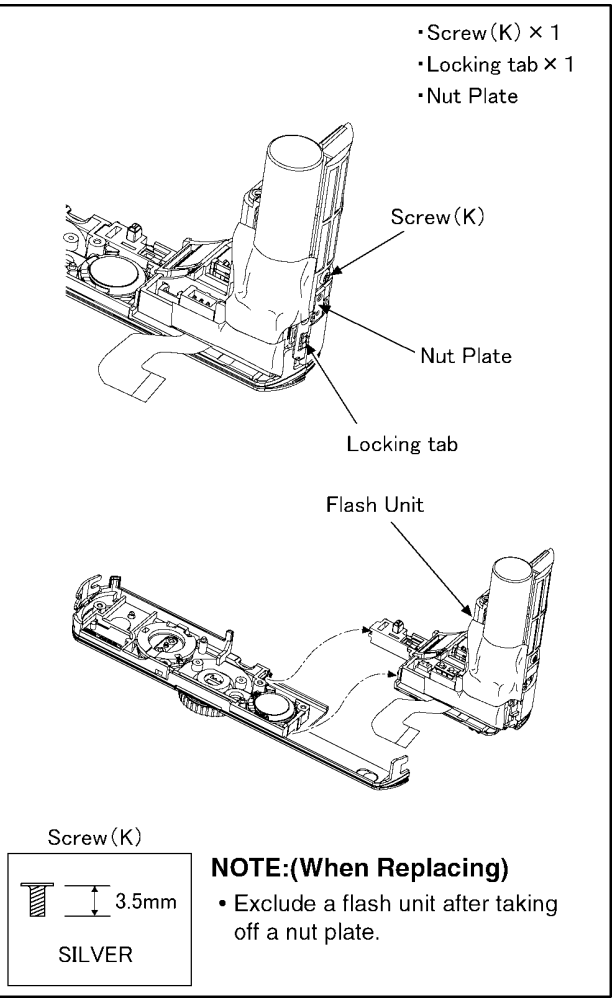

NOTE:(When Replacing)

- Exclude a flash unit after taking off a nut plate.

Fig. D10

8.3.10. Removal of the Flash PCB

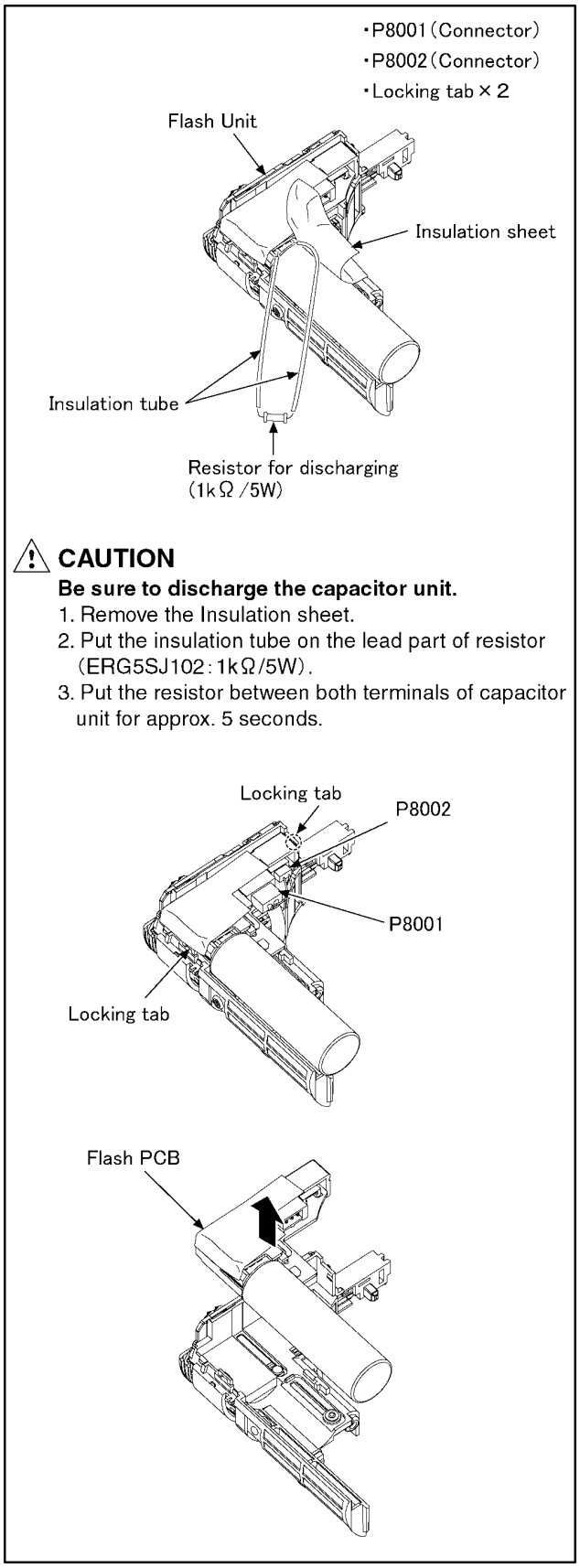

CAUTION

Be sure to discharge the capacitor unit.

1. Remove the Insulation sheet.
2. Put the insulation tube on the lead part of resistor (ERG5SJ102 : 1kΩ/5W).
3. Put the resistor between both terminals of capacitor unit for approx. 5 seconds.

Fig. D11

8.3.11. Removal of the Lens Ornament Unit

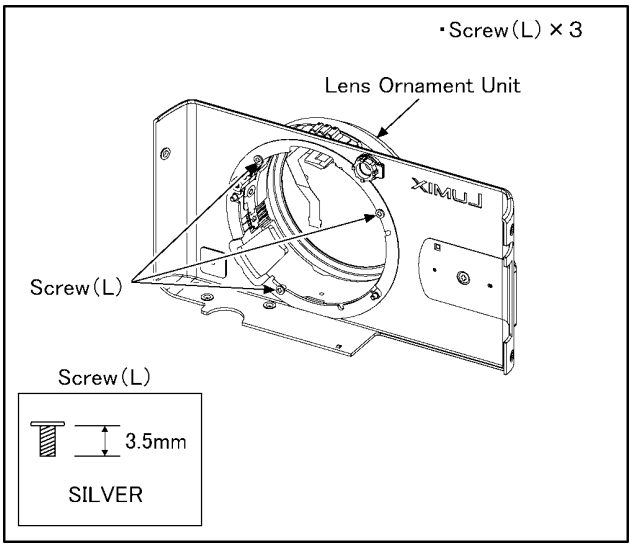

Fig. D12

8.3.12. Removal of the MF-AF Aspect FPC

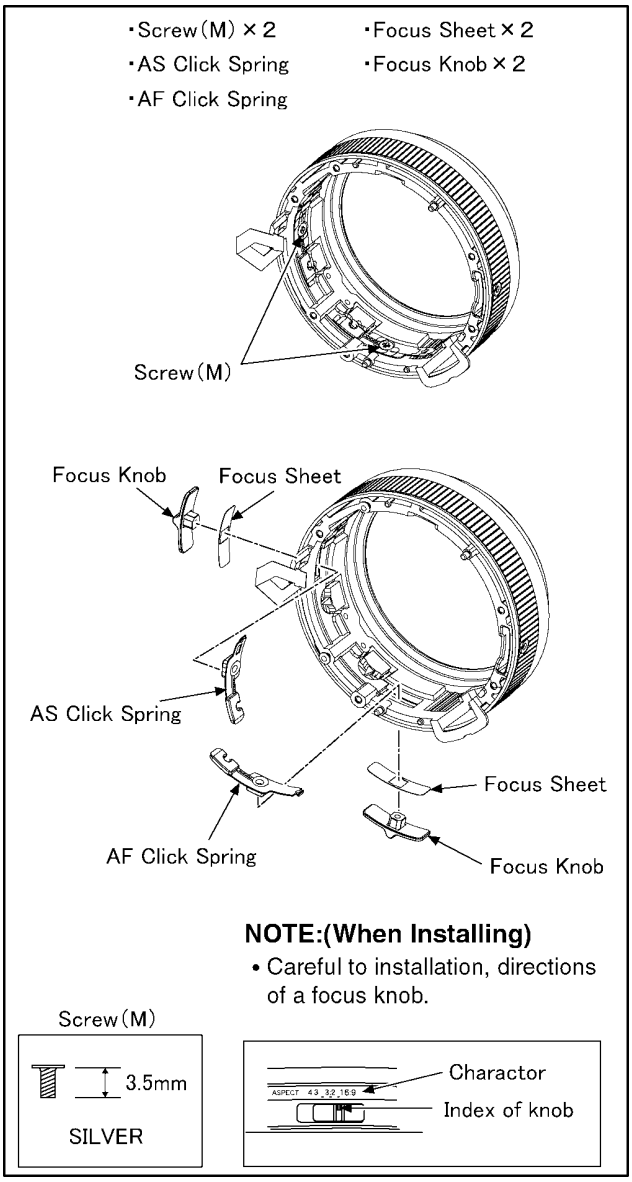

Fig. D13

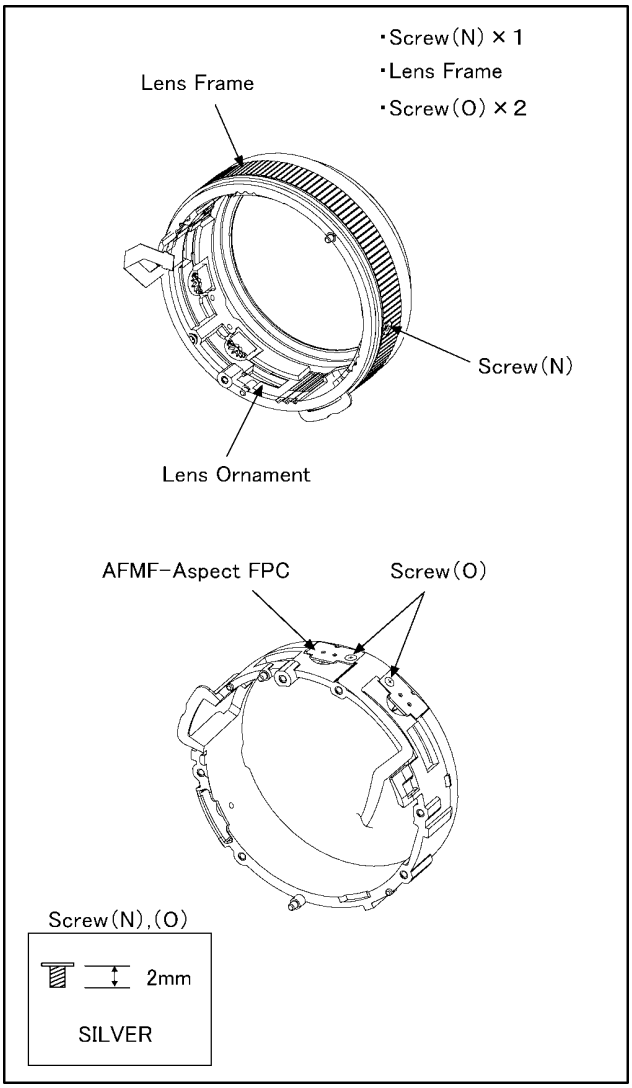

Fig. D14

NOTE: (When Assembling)

Confirm the contents as shown below.

- Condition of the screw is tightened.
- Assembling condition of mechanism parts (distortion, space etc.)
- Dust and dirt of the lens, display condition of the LCD (gradient etc.)
- Dust and dirt of the LCD

8.4. Disassembly Procedure for the Lens

NOTE: When Disassembling and Assembling for the Lens

1. To prevent the lens from catching the dust and dirt, perform the following procedures with the CCD unit is installing.
   Disassembling procedures for the CCD unit, refer to item 8.6.
2. Take care that the dust and dirt are not entered into the lens.
   In case of the dust is putted on the lens, blow off them by airbrush.
3. Do not touch the surface of lens.
4. Use lens cleaning KIT (BK)(VFK1900BK).
5. Apply the grease (VFK1829) to the point where is shown to" Grease apply" in the figure.
   When the grease is applied, use a toothpick and apply thinly.

8.4.1. Removal of the Zoom Motor Unit and Master Flange Unit

1. Remove the solders (2 points).
2. Remove the lock (4 points).
3. Unscrew the 5 screws (A).
4. Remove the Zoom Motor Unit to the indicated by arrow.
5. Remove the master flange unit.

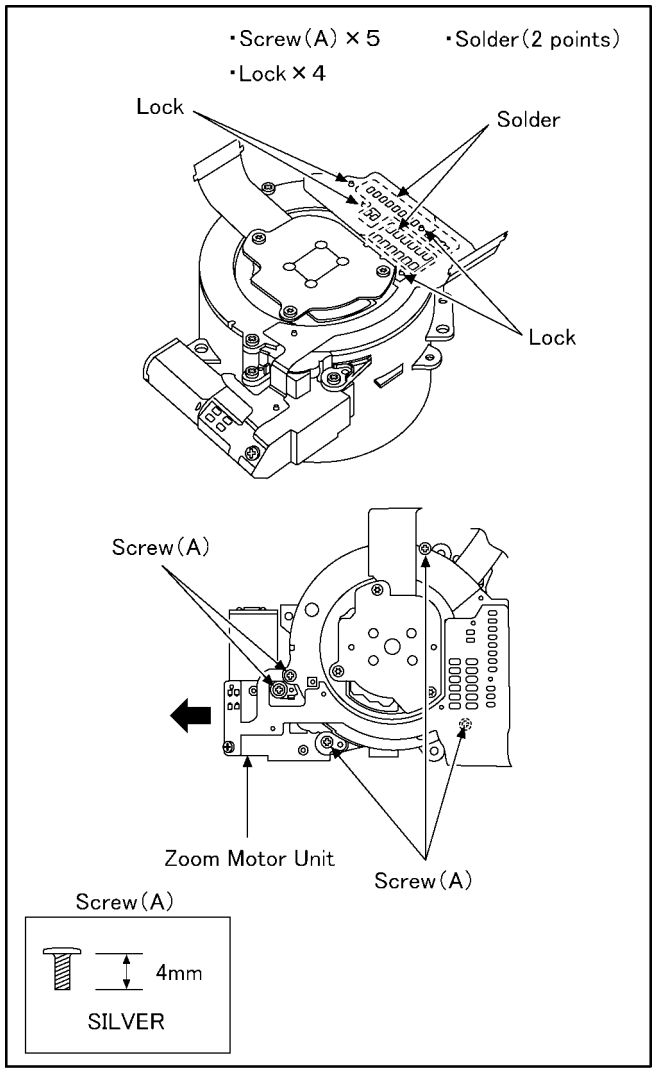

8.4.2. Removal of the Drive/Direct Unit, 1st Lens Frame/2nd Lens Frame Move Unit, 3rd Lens Frame Move Unit

1. Turn the drive gear to the indicated by arrow fully.

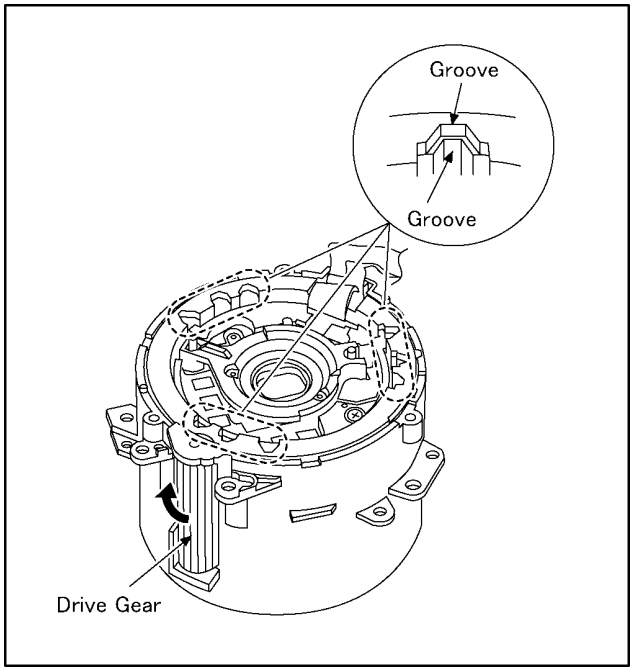

1. Push the drive unit to the indicated by arrow from lens side, and then remove the unit of drive/direct unit, 1st lens frame/2nd lens frame move unit, 3rd lens frame move unitfrom the fixed frame unit.

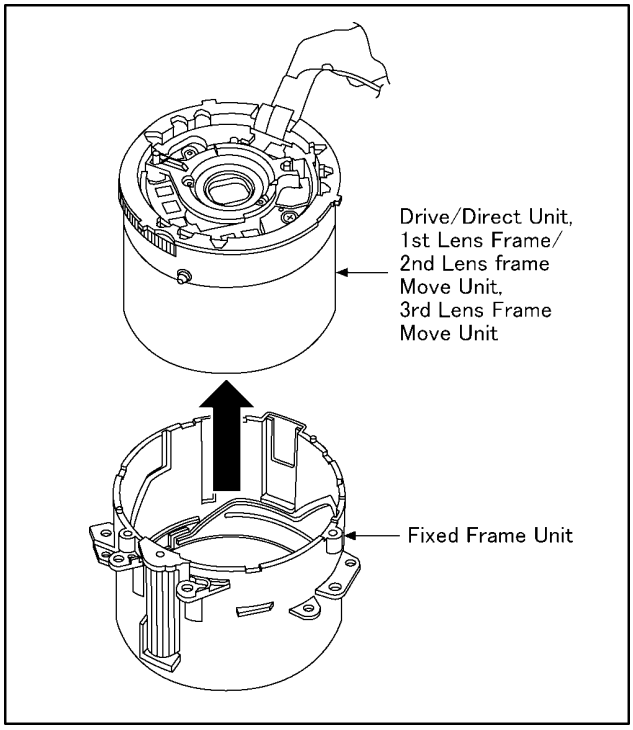

1. Push the 1st lens frame move unit to the indicated by arrow from lens side, and then remove the unit of 1st lens frame/2nd lens frame move/ 3rd lens frame moveunit from the drive/direct unit.

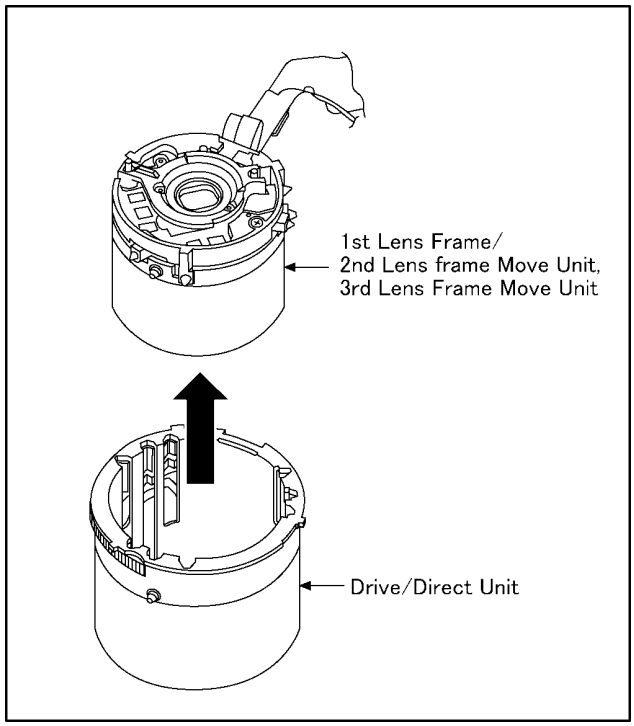

1. Push the 3rd lens frame move unit to the indicated by arrow.

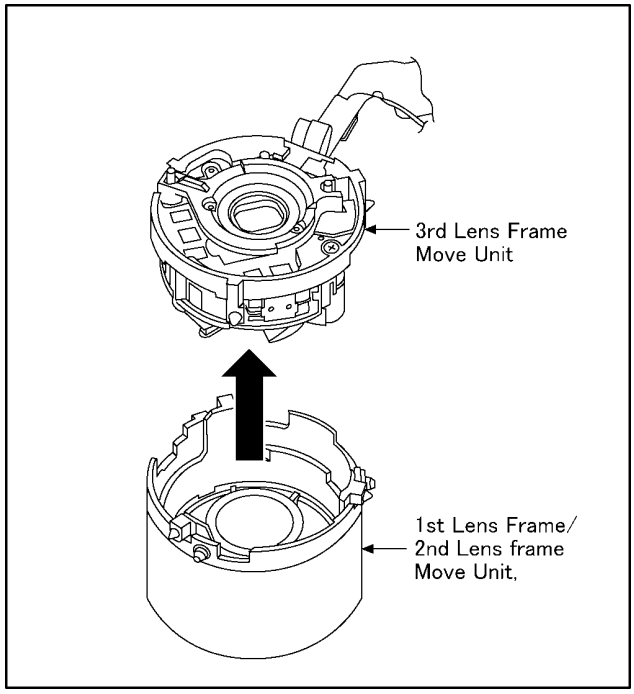

8.4.3. Removal of the Direct Frame

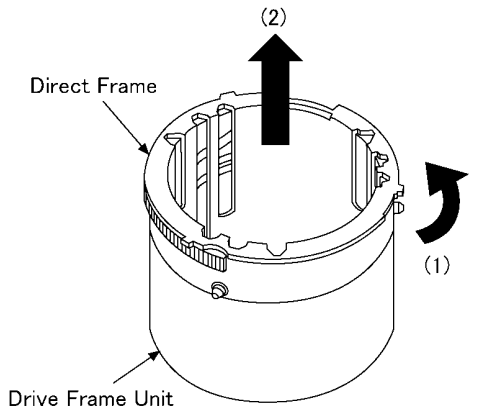

※ Turn the lens ring fully in the direction of arrow(1) and remove the in the direction of arrow(2) from drive frame unit.

8.4.4. Removal of the 2nd Lens Frame Move Unit

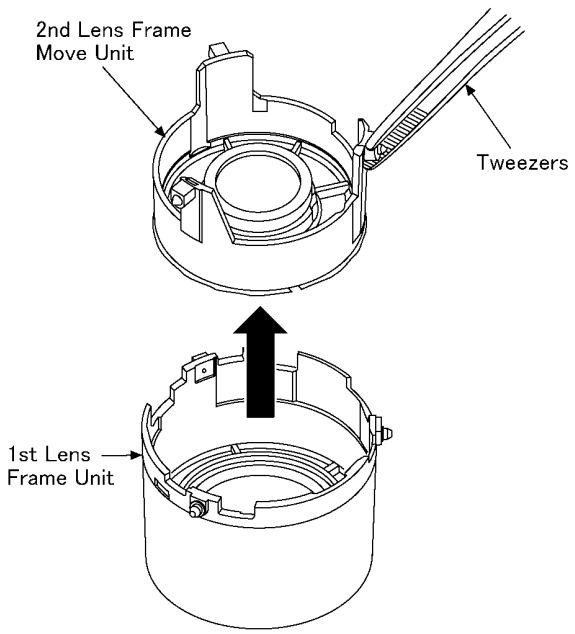

8.5. Assembly Procedure for the Lens

8.5.1. Phase alignment of the Direct Frame and Drive Frame Unit

• Align the △ mark, and then install the lens ring to fix frame unit.

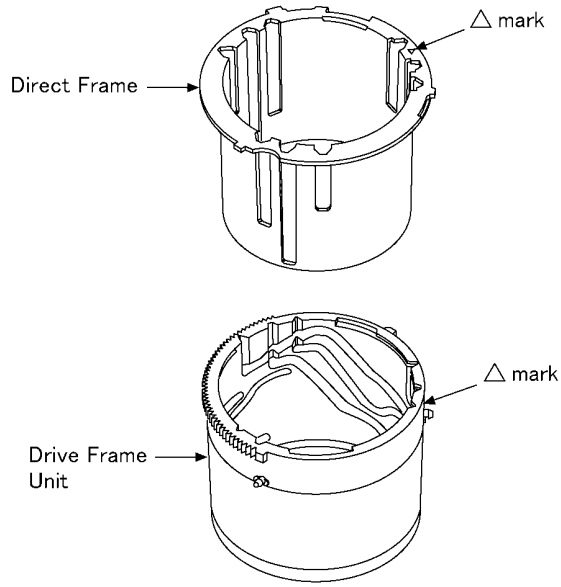

• Turn the Lens ring in the direction of an arrow. (about 0.4 in.) and nine places of the groove at the position are matched and installed.

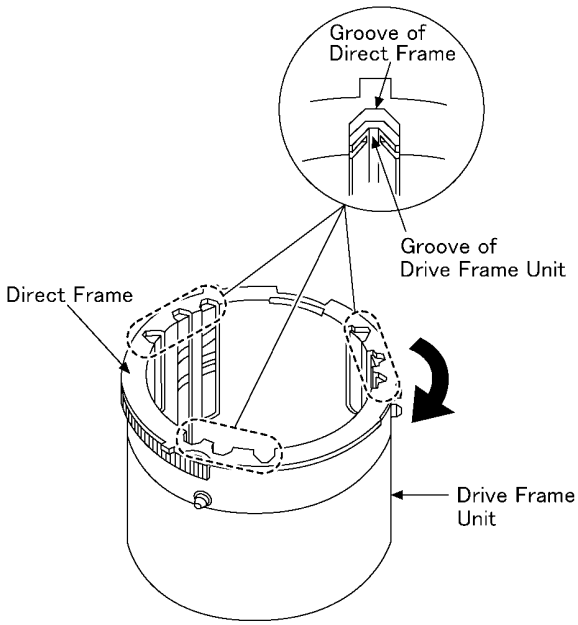

8.5.2. Phase alignment of the Drive/Direct Unit and Fixed Frame

• Align the △ mark, and then install the drive frame unit and lens ring to fix frame unit.

※ When fix frame unit and drive frame unit are installed, it is confirmed that both gears bite each other surely.

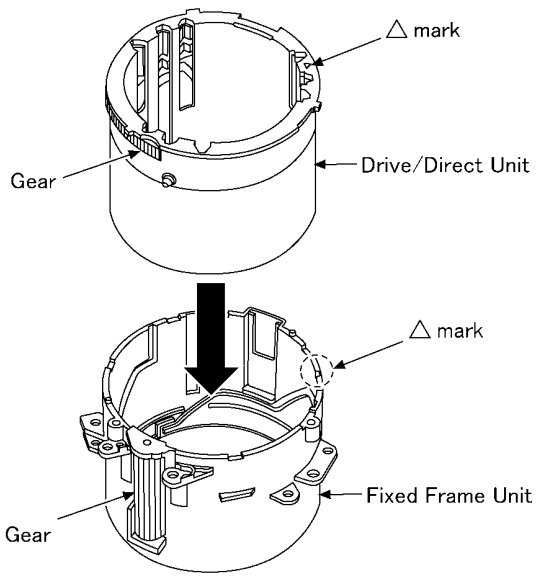

8.5.3. Phase alignment of the 1st Lens Frame Unit and Fixed Frame

• Align the △ mark and ① mark then install the 1st lens frame unit to fix frame unit.

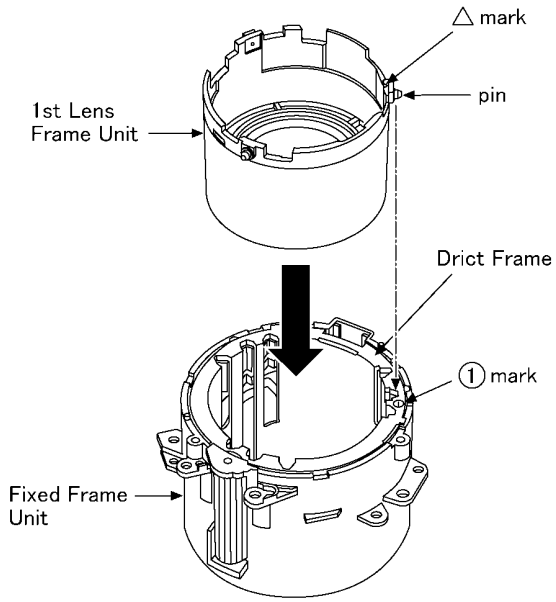

8.5.4. Phase alignment of the 2nd Lens Frame Move Unit and Fixed Frame

• Align the △ mark, and then install the 2nd lens frame unit to fix frame unit.

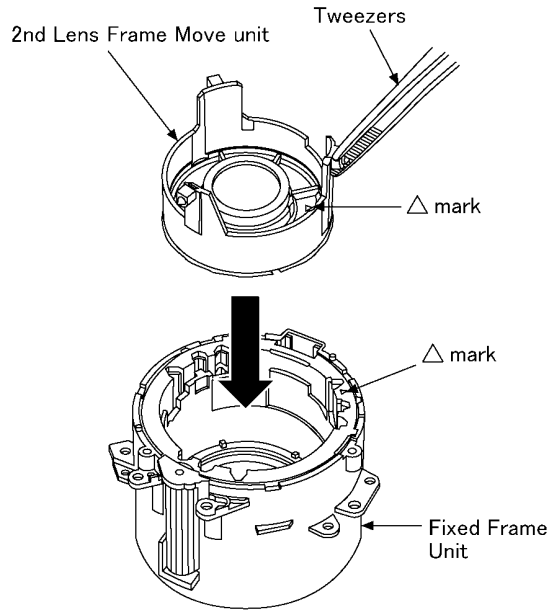

8.5.5. Phase alignment of the 3rd Lens Frame Move Unit and Fixed Frame

- Align the △ mark and ③ mark then install the 3rd lens frame unit to fix frame.

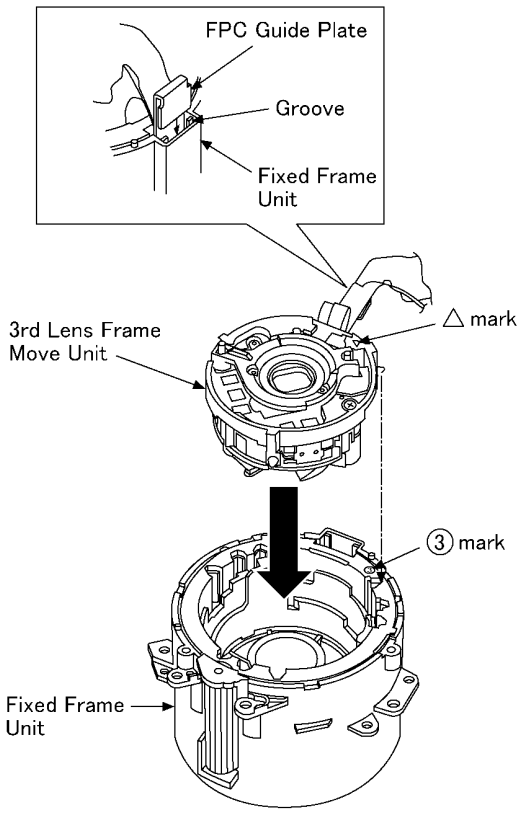

NOTE: (When Installing)

- Fix the FPC guide plate to the install of fix frame.

8.5.6. Assembly for the Zoom Motor Unit and Master Flange Unit

- Install the guide pin of fix frame to the hole of master flange unit.

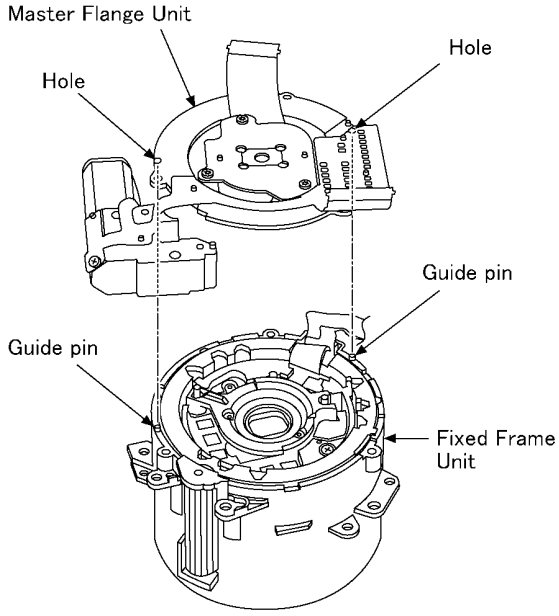

- Set the guide pin of zoom motor to the hole of fix frame unit.

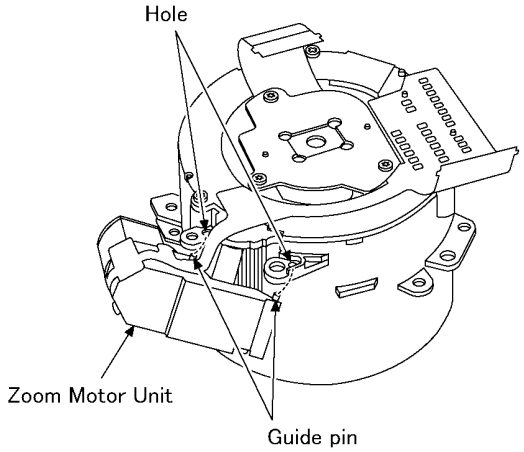

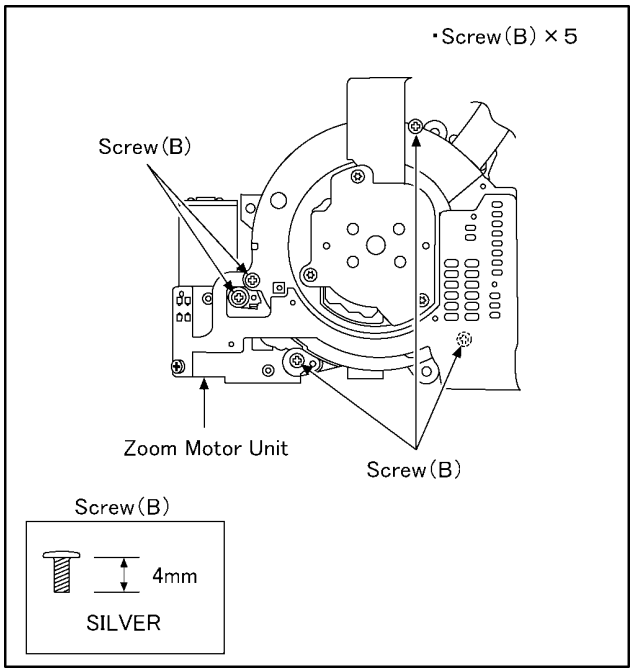

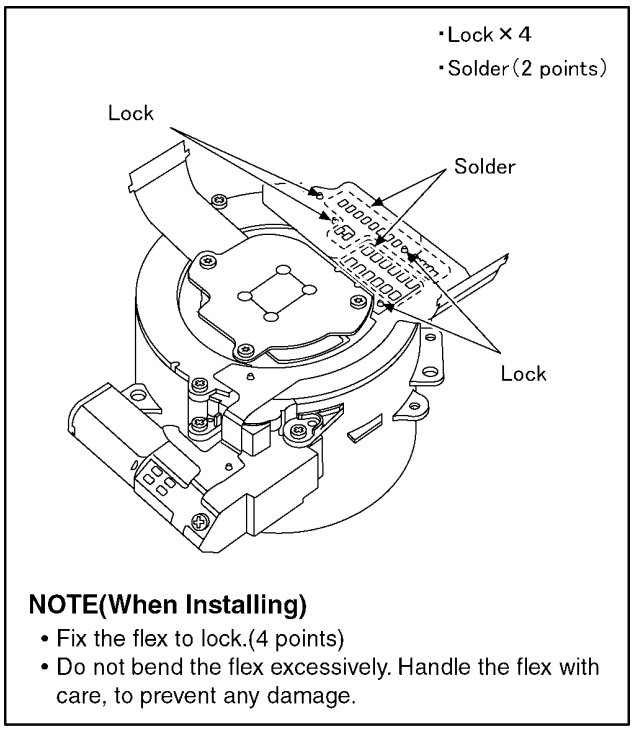

NOTE(When Installing)

- Fix the flex to lock.(4 points)
- Do not bend the flex excessively. Handle the flex with care, to prevent any damage.

8.6. Removal of the CCD

To prevent the CCD unit from catching the dust and dirt, do not remove the CCD unit except for replacing.

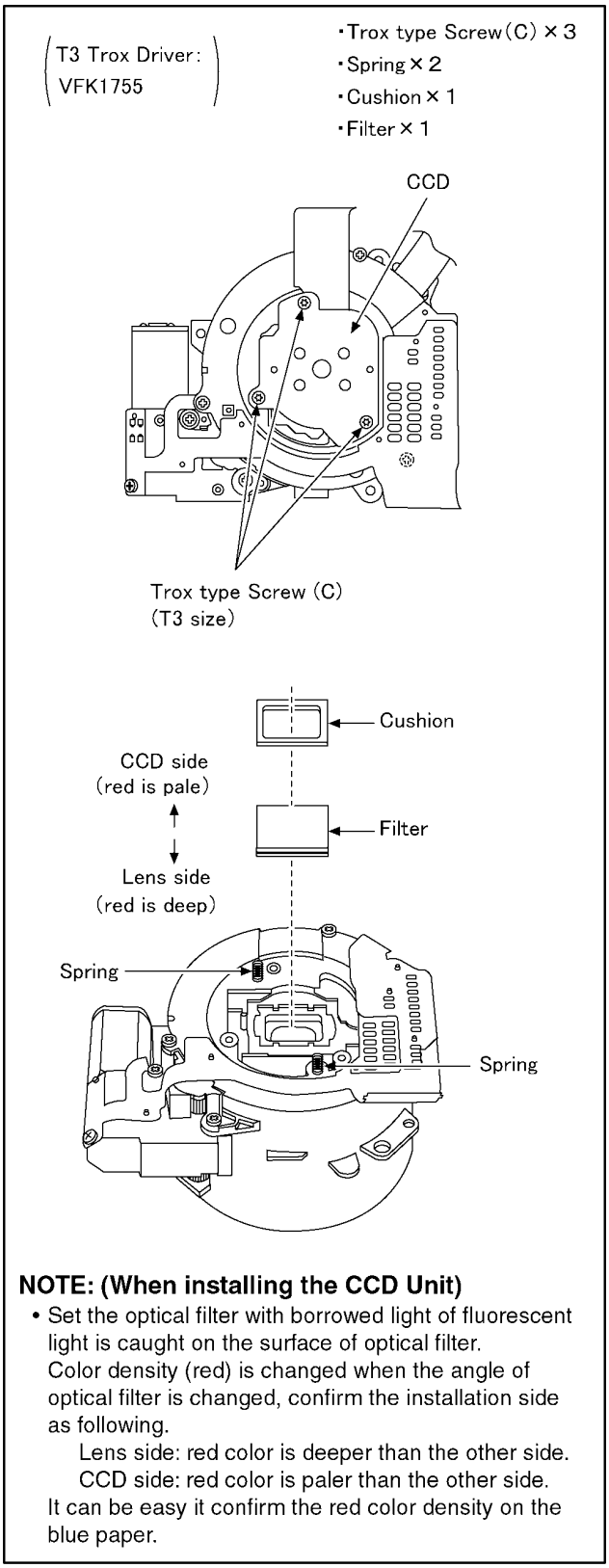

NOTE: (When installing the CCD Unit)

- Set the optical filter with borrowed light of fluorescent light is caught on the surface of optical filter.
  Color density (red) is changed when the angle of optical filter is changed, confirm the installation side as following.
  Lens side: red color is deeper than the other side.
  CCD side: red color is paler than the other side.
  It can be easy it confirm the red color density on the blue paper.

9 Measurements and Adjustments

9.1. Adjustment Procedures

Even if the MAIN PCB is replaced as a unit, it must be achieved the adjustment and factory setting. The adjustment in this unit is separated two types as shown below.
The adjustment instruction is available at "Software download" on the "Support Information from NWBG-PAVC" web-site in "TSN System".

1. **Main unit adjustment:** All adjustments except for LCD adjustment.
   This unit mounts the adjustment software for main unit, it wouldn't need the connection between the PC and this unit with USB cable.
2. **LCD adjustment:** Adjustment for LCD.
   It need the connection between the PC and this unit with USB cable.
   The adjustment instruction is available at "Software download" on the "Support Information from NWBG-PAVC" web-site in "TSN System", together with maintenance software.

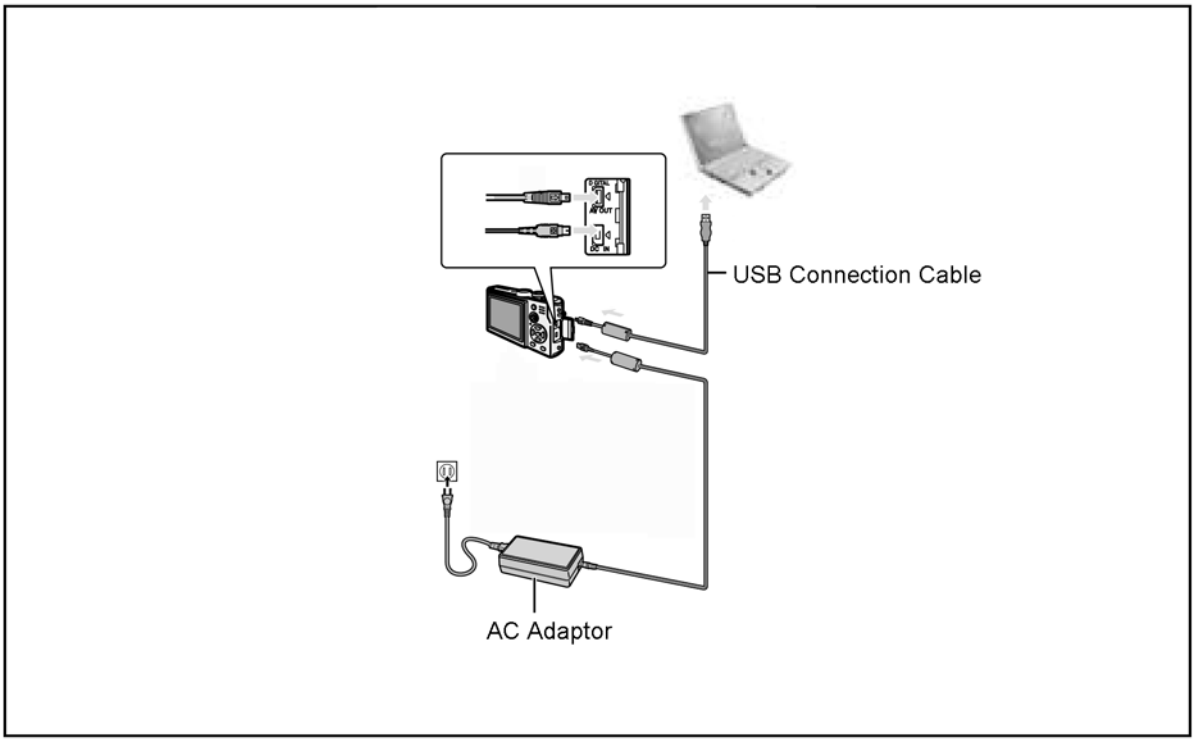

10 Maintenace

10.1. Cleanig Lens and LCD Panel

Do not touch the surface of lens and LCD Panel with your hand.
When cleaning the lens, use air-Blower to blow off the dust.
When cleaning the LCD Panel, dampen the lens cleaning paper with lens cleaner, and the gently wipe the their surface.
Note:

A lens cleaning paper and lens cleaner are available at local camera shops and market place.

DSC0508018CE

Service Manual

Diagrams and Replacement Parts List

Digital Camera

DMC-LX1PP
DMC-LX1EB
DMC-LX1EG
DMC-LX1EGM
DMC-LX1GC
DMC-LX1GD
DMC-LX1GK
DMC-LX1GN
DMC-LX1GT
DMC-LX1SG

Vol. 1
Colour
(S).....Silver Type (Except GD)
(K).....Black Type (Except GN/GT/SG)

S1. ABOUT INDICATION OF THE SCHEMATIC DIAGRAMS

S1.1. IMPORTANT SAFETY NOTICE:

COMPONENTS IDENTIFIED WITH THE MARK ⚠ HAVE THE SPECIAL CHARACTERISTICS FOR SAFETY. WHEN REPLACING ANY OF THESE COMPONENTS USE ONLY THE SAME TYPE.

1.Although reference number of the parts is indicated on the P.C.B. drawing and/or schematic diagrams, it is NOT mounted on the P.C.B. when it is displayed with "$" mark.

2.It is only the "Test Round" and no terminal (Pin) is available on the P.C.B. when the TP (Test Point) indicated as "●" mark.

3.The voltage being indicated on the schematic diagram is measured in "Standard-Playback" mode when there is no specify mode is mentioned.

4.Although the voltage and waveform available on here is measured with standard frame, it may be differ from actual measurement due to modification of circuit and so on.

5.The voltage being indicated here may be include observational-error (deviation) due to internal-resistance and/or reactance of equipment. Therefore, handle the value indicated on here as reference.

6.Use the parts number indicated on the Replacement Parts List .

7.Indication on Schematic diagrams:

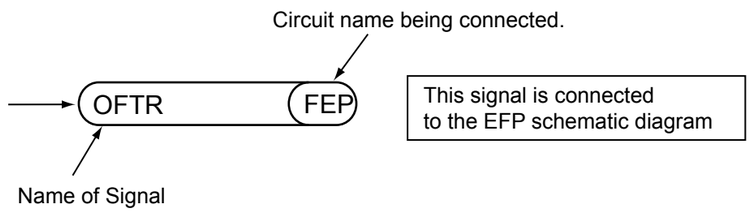

Table of contents

S1. ABOUT INDICATION OF THE SCHEMATIC DIAGRAMS S-1
S1.1. IMPORTANT SAFETY NOTICE: S-1

S2. BLOCK DIAGRAM S-2
S2.1. OVERALL BLOCK DIAGRAM S-2
S2.2. SYSTEM CONTROL BLOCK DIAGRAM S-3
S2.3. VIDEO/AUDIO PROCESS BLOCK DIAGRAM S-4
S2.4. SENSOR BLOCK DIAGRAM S-5
S2.5. LENS DRIVE BLOCK DIAGRAM S-6
S2.6. POWER BLOCK DIAGRAM S-7

S3. SCHEMATIC DIAGRAMS S-8
S3.1. INTERCONNECTION DIAGRAM S-8
S3.2. AF-ASSIST SCHEMATIC DIAGRAMS S-9
S3.3. TOP-OPE SCHEMATIC DIAGRAMS S-9
S3.4. FLASH FLEX SCHEMATIC DIAGRAMS S-10
S3.5. AFMF-ASPECT SCHEMATIC DIAGRAMS S-11
S3.6. LENS FLEX SCHEMATIC DIAGRAMS S-11
S3.7. CCD FLEX SCHEMATIC DIAGRAMS S-12

S4. PRINT CIRCUIT BOARD S-13
S4.1. AF-ASSIST P.C.B. S-13
S4.2. TOP-OPE P.C.B. S-13
S4.3. FLASH P.C.B. S-14
S4.4. AFMF-ASPECT FLEX S-14
S4.6. LENS FLEX S-15
S4.7. CCD FLEX S-15

S5. REPLACEMENT PARTS LIST S-17

S6. EXPLODED VIEWS S-22
S6.1. FRAME & CASING SECTION (1) S-22
S6.2. FRAME & CASING SECTION (2) S-23
S6.3. PACKING PARTS & ACCESSORIES SECTION S-24

S2. BLOCK DIAGRAM

S2.1. OVERALL BLOCK DIAGRAM

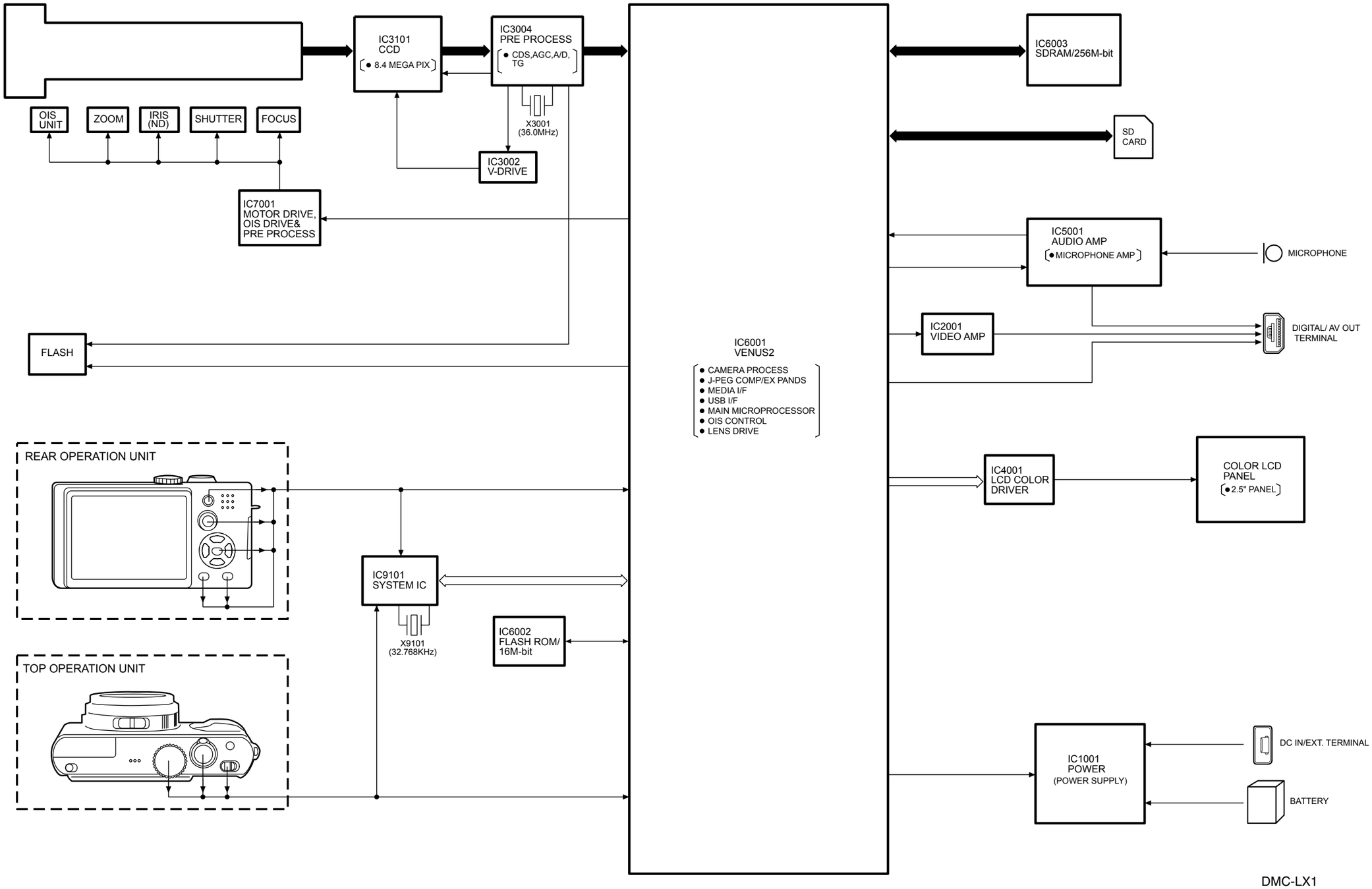

DMC-LX1
OVERALL BLOCK DIAGRAM

S2.2. SYSTEM CONTROL BLOCK DIAGRAM

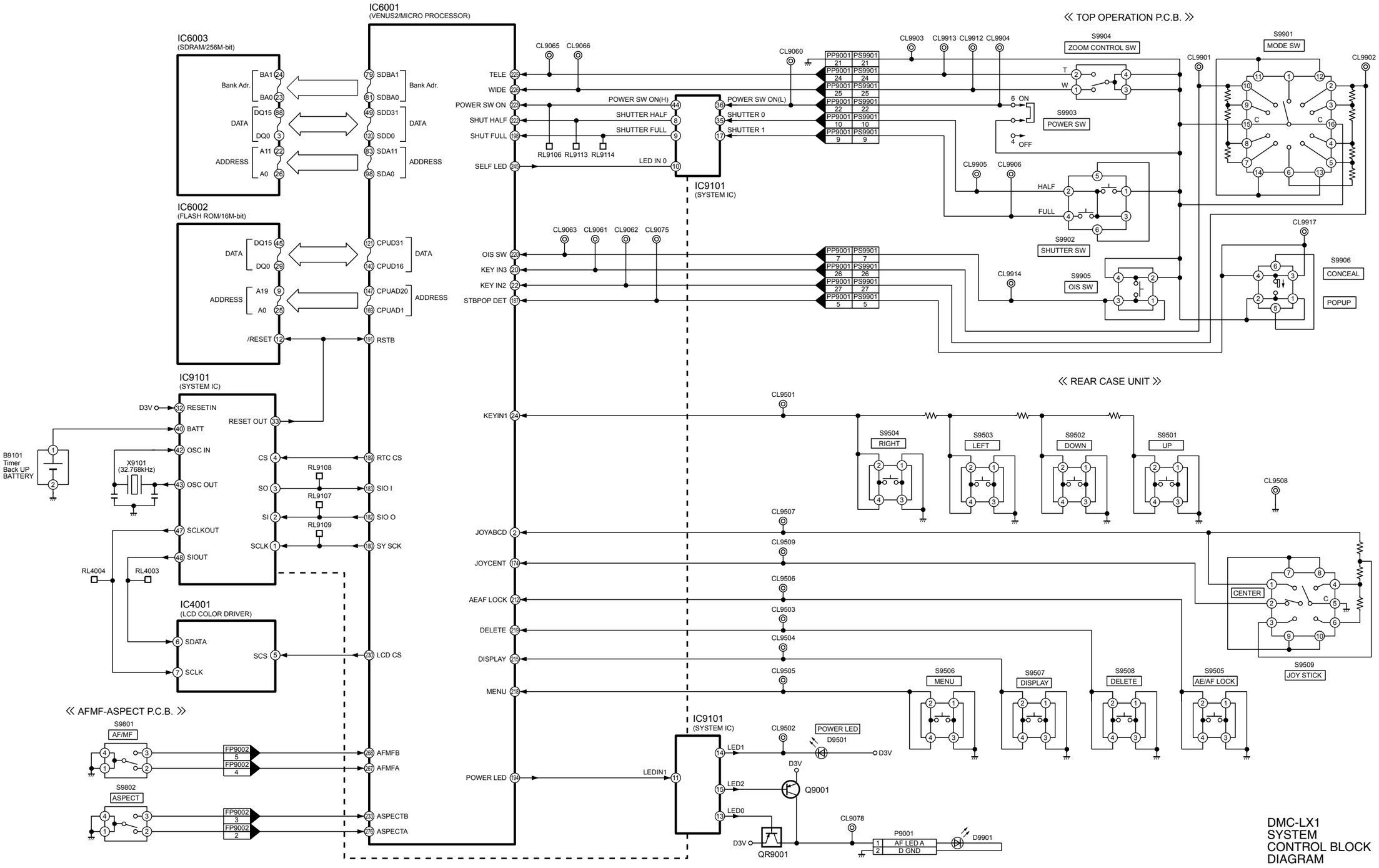

DMC-LX1
SYSTEM
CONTROL BLOCK
DIAGRAM

S2.3. VIDEO/AUDIO PROCESS BLOCK DIAGRAM

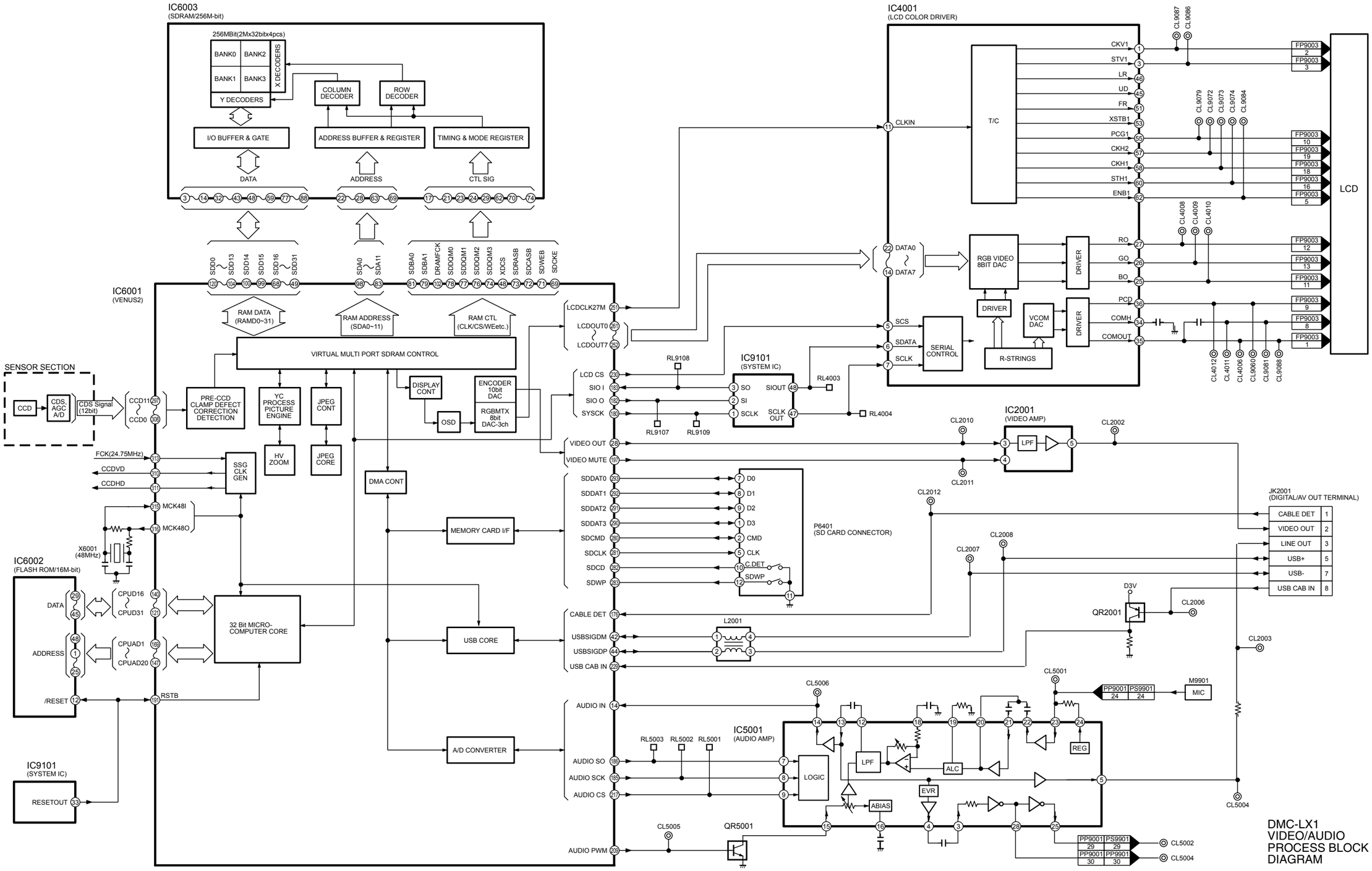

DMC-LX1
VIDEO/AUDIO
PROCESS BLOCK
DIAGRAM

S2.4. SENSOR BLOCK DIAGRAM

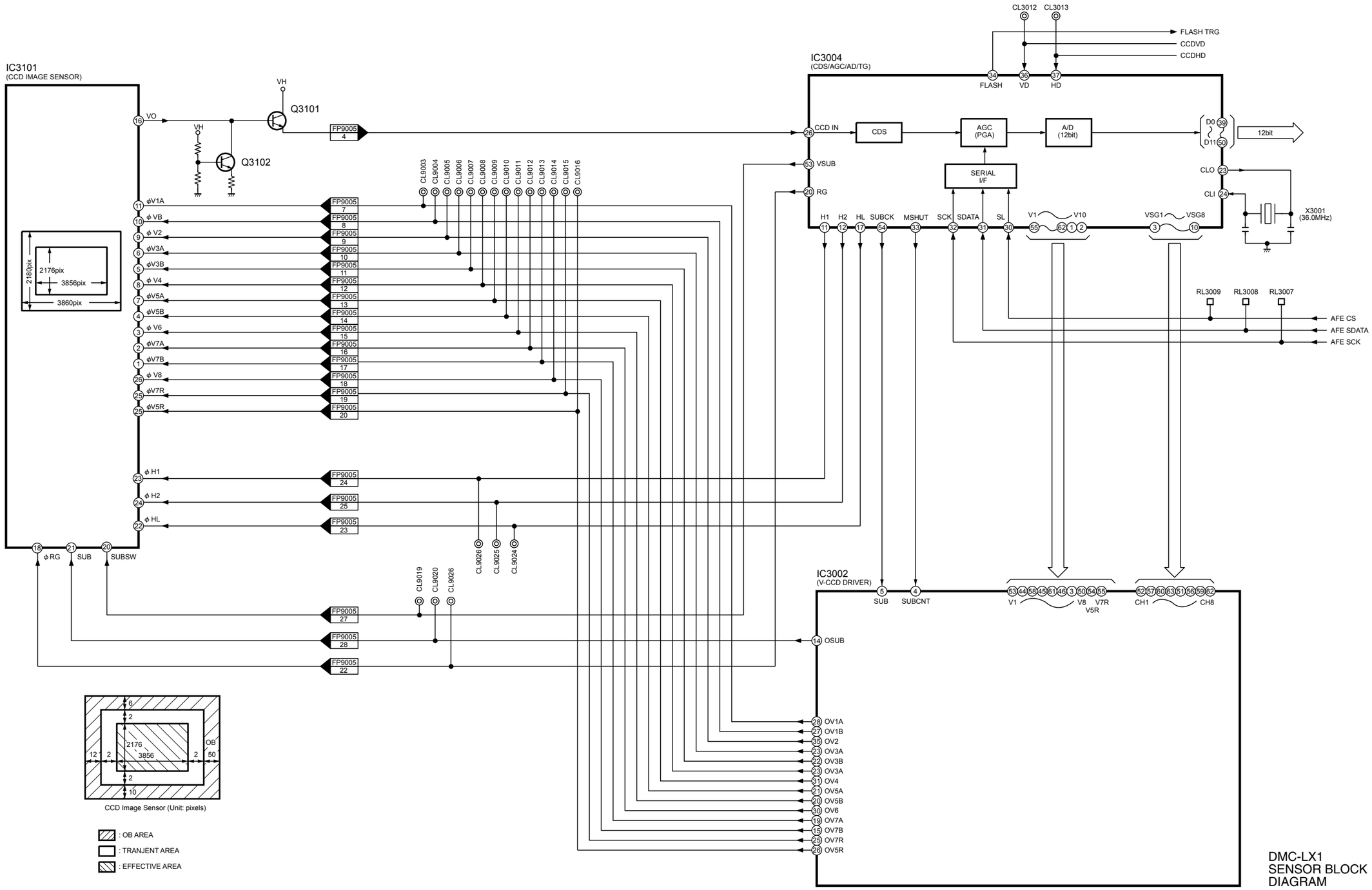

DMC-LX1
SENSOR BLOCK
DIAGRAM

S2.5. LENS DRIVE BLOCK DIAGRAM

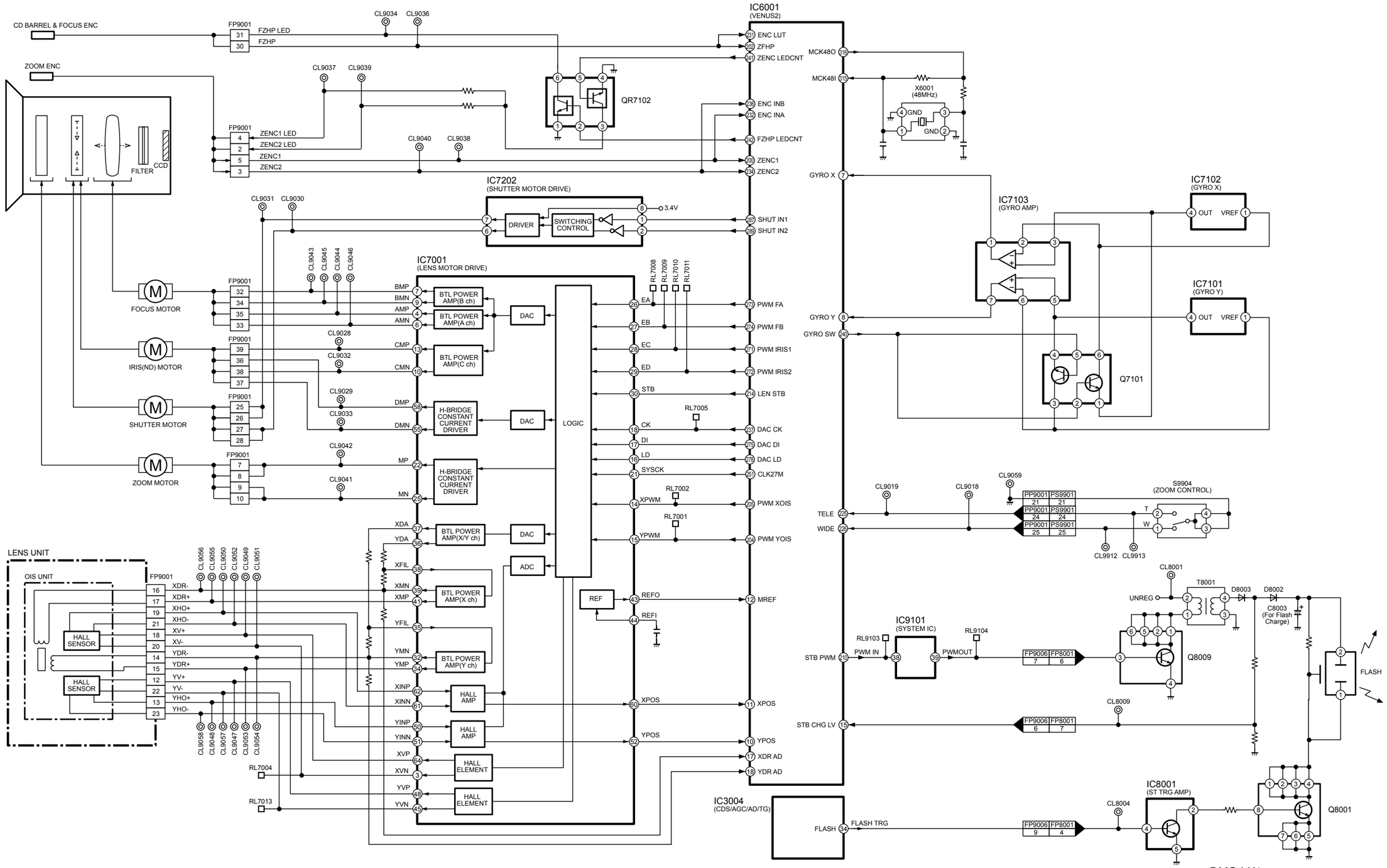

DMC-LX1
LENS DRIVE BLOCK
DIAGRAM

S2.6. POWER BLOCK DIAGRAM

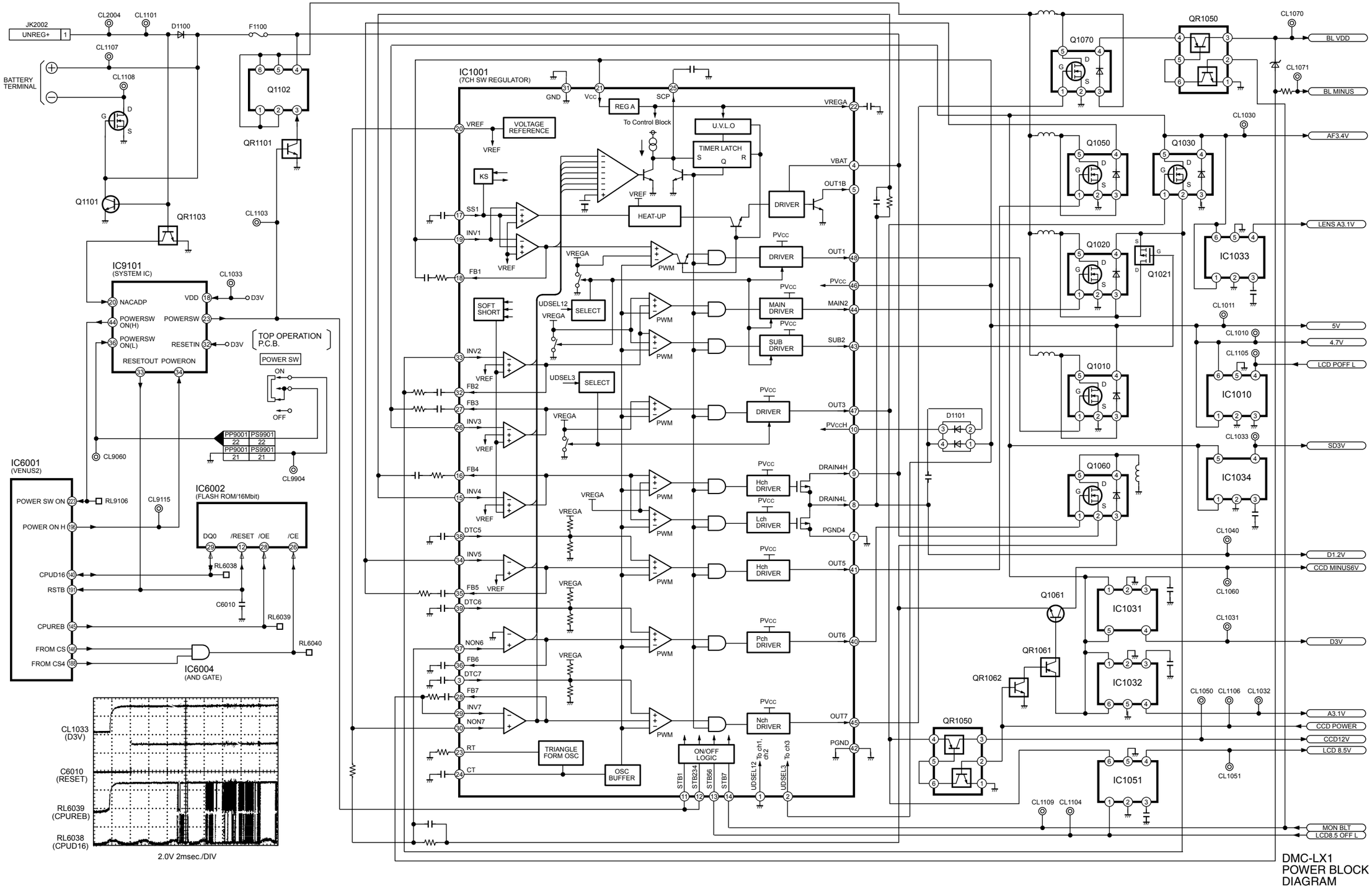

DMC-LX1
POWER BLOCK
DIAGRAM

S3. SCHEMATIC DIAGRAMS

S3.1. INTERCONNECTION DIAGRAM

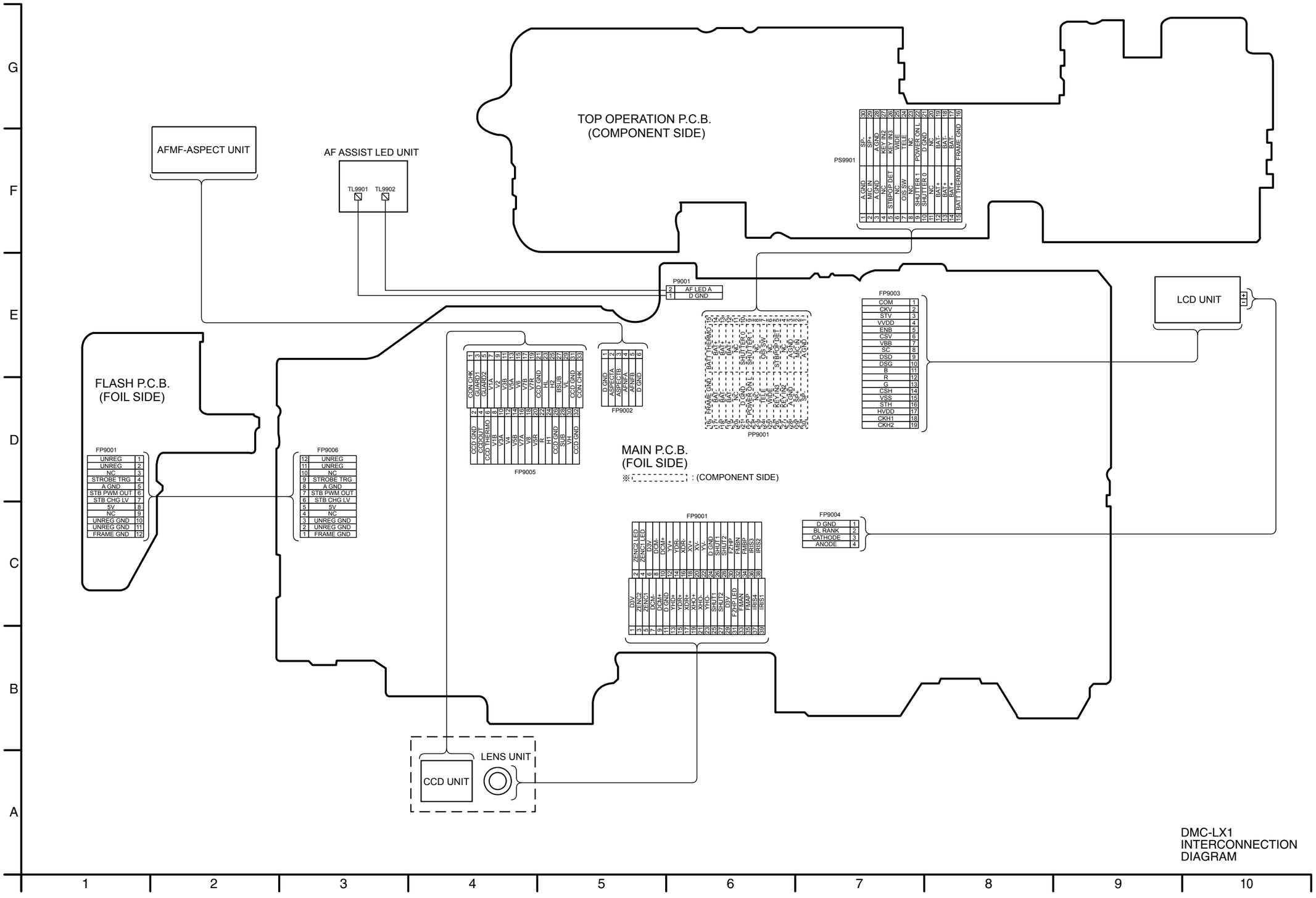

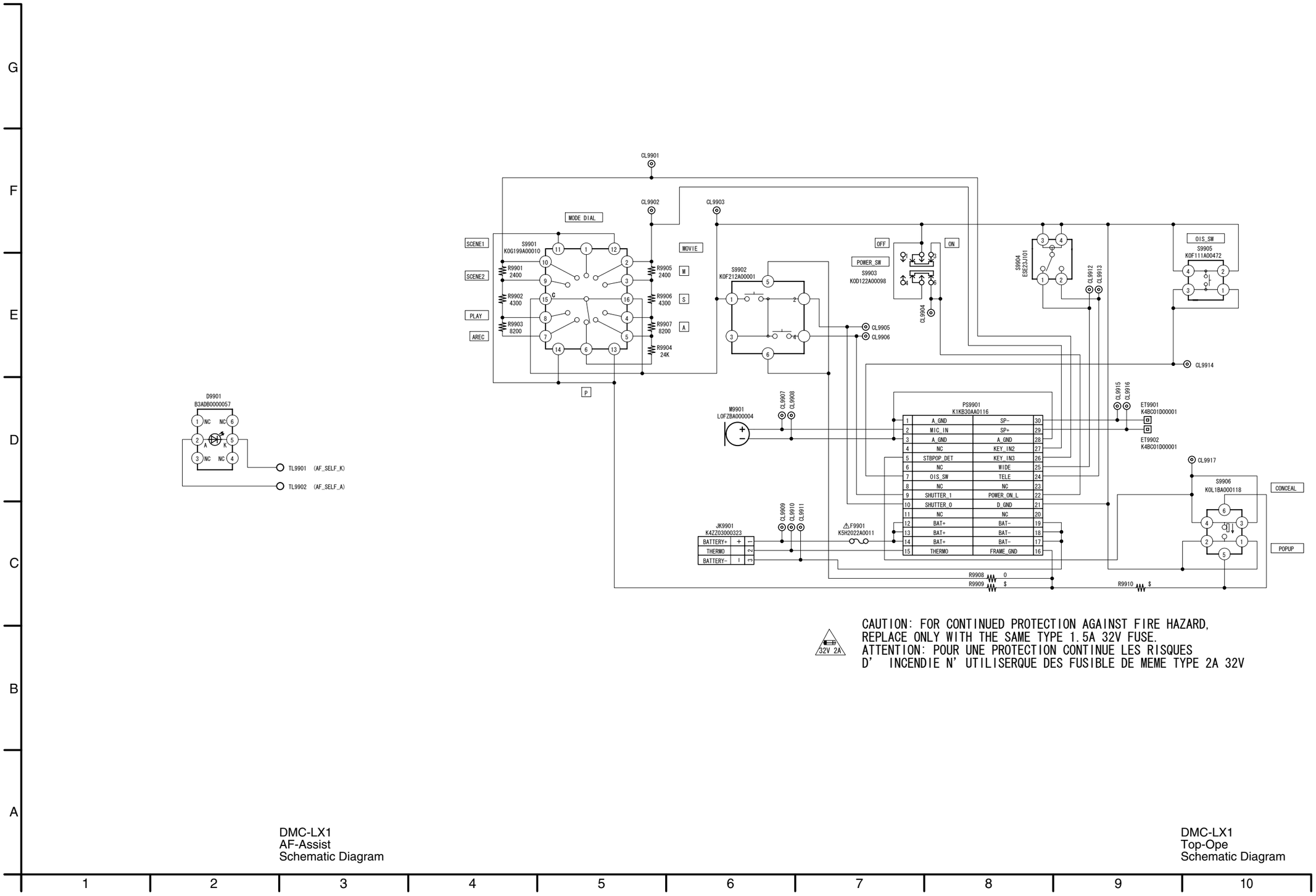

CAUTION: FOR CONTINUED PROTECTION AGAINST FIRE HAZARD,
REPLACE ONLY WITH THE SAME TYPE 1.5A 32V FUSE.
ATTENTION: POUR UNE PROTECTION CONTINUE LES RISQUES
D' INCENDIE N' UTILISERQUE DES FUSIBLE DE MEME TYPE 2A 32V

DMC-LX1
AF-Assist
Schematic Diagram

DMC-LX1
Top-Ope
Schematic Diagram

S3.4. FLASH FLEX SCHEMATIC DIAGRAMS

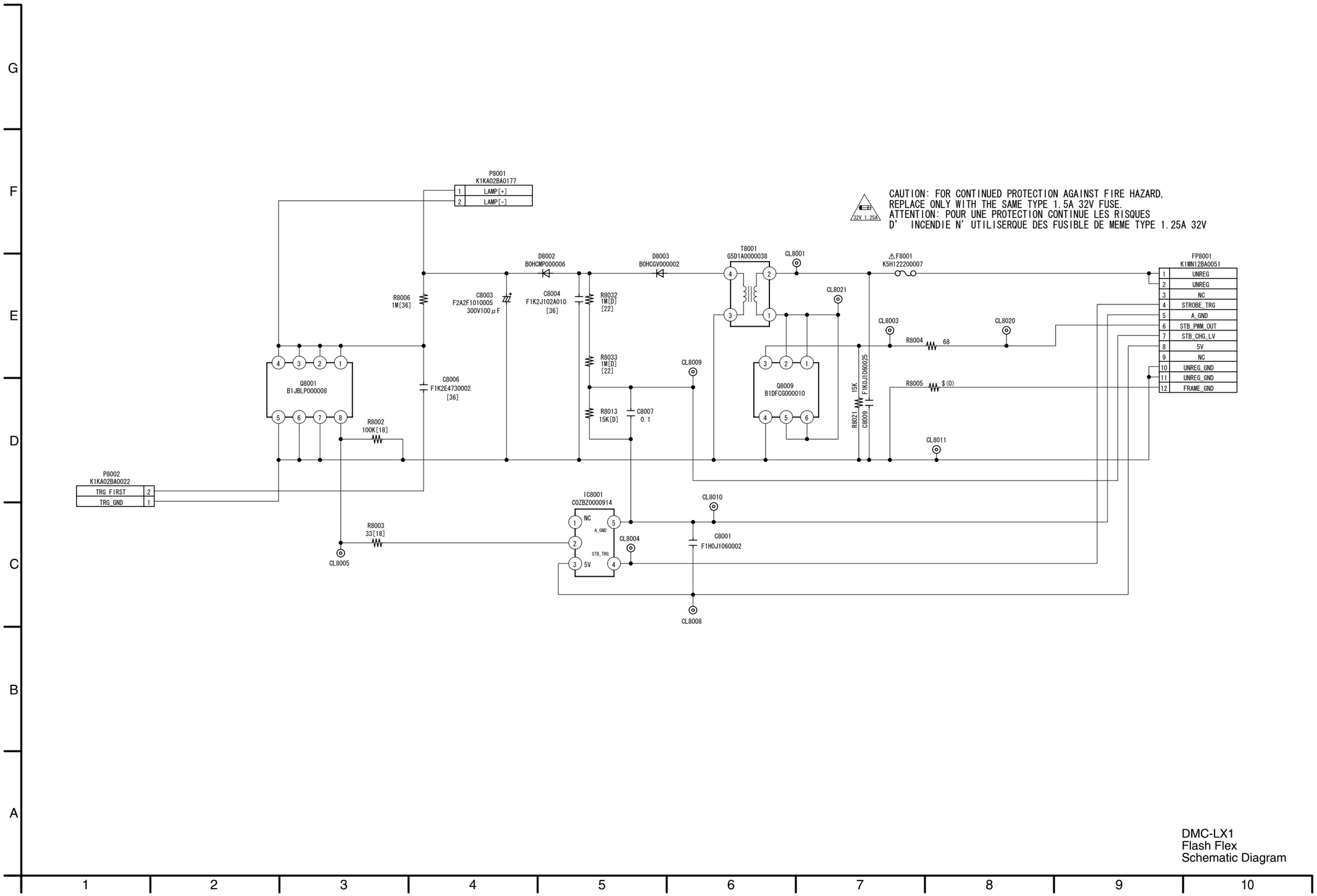

DMC-LX1
Flash Flex
Schematic Diagram

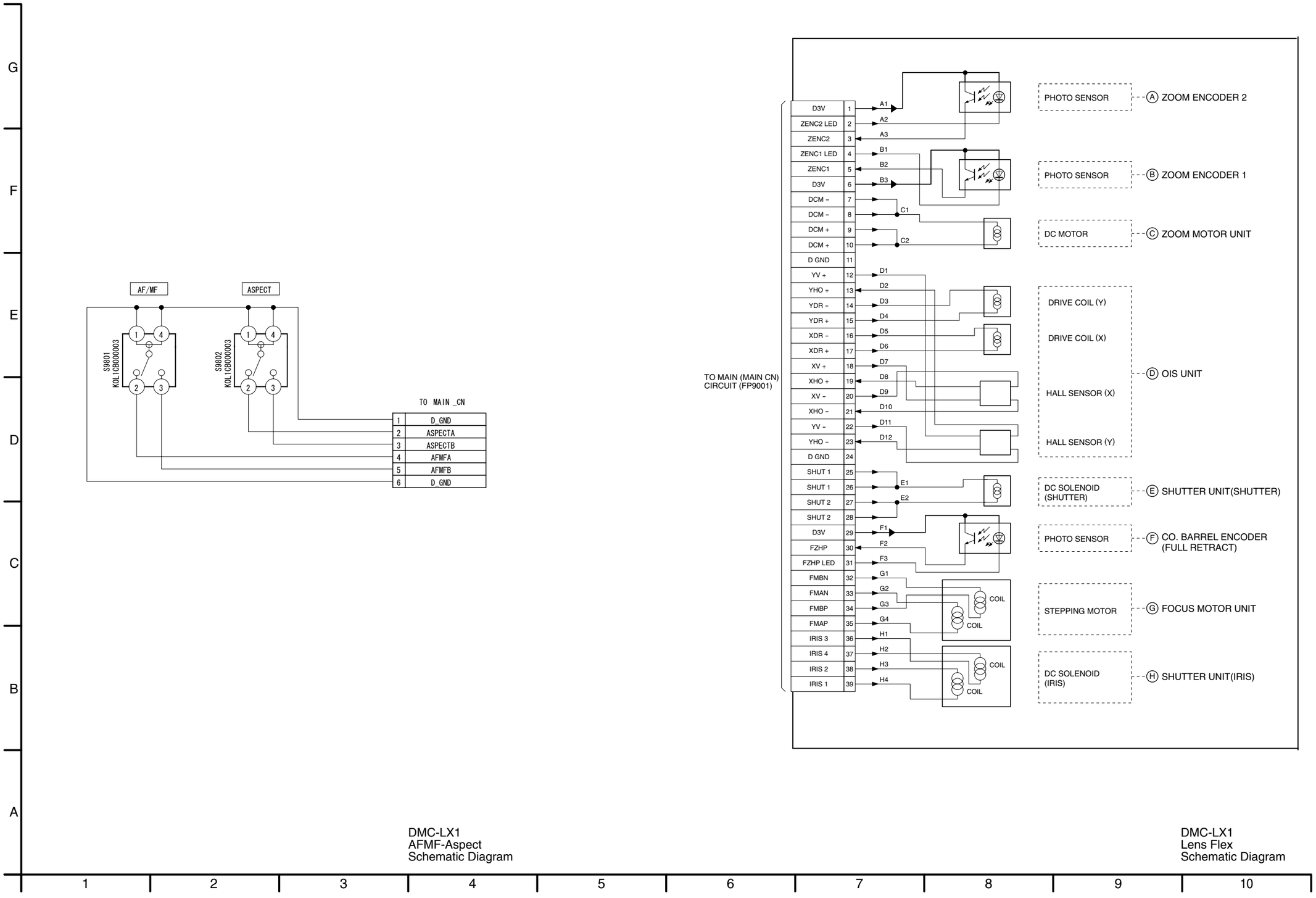

DMC-LX1
AFMF-Aspect
Schematic Diagram

DMC-LX1
Lens Flex
Schematic Diagram

S3.7. CCD FLEX SCHEMATIC DIAGRAMS

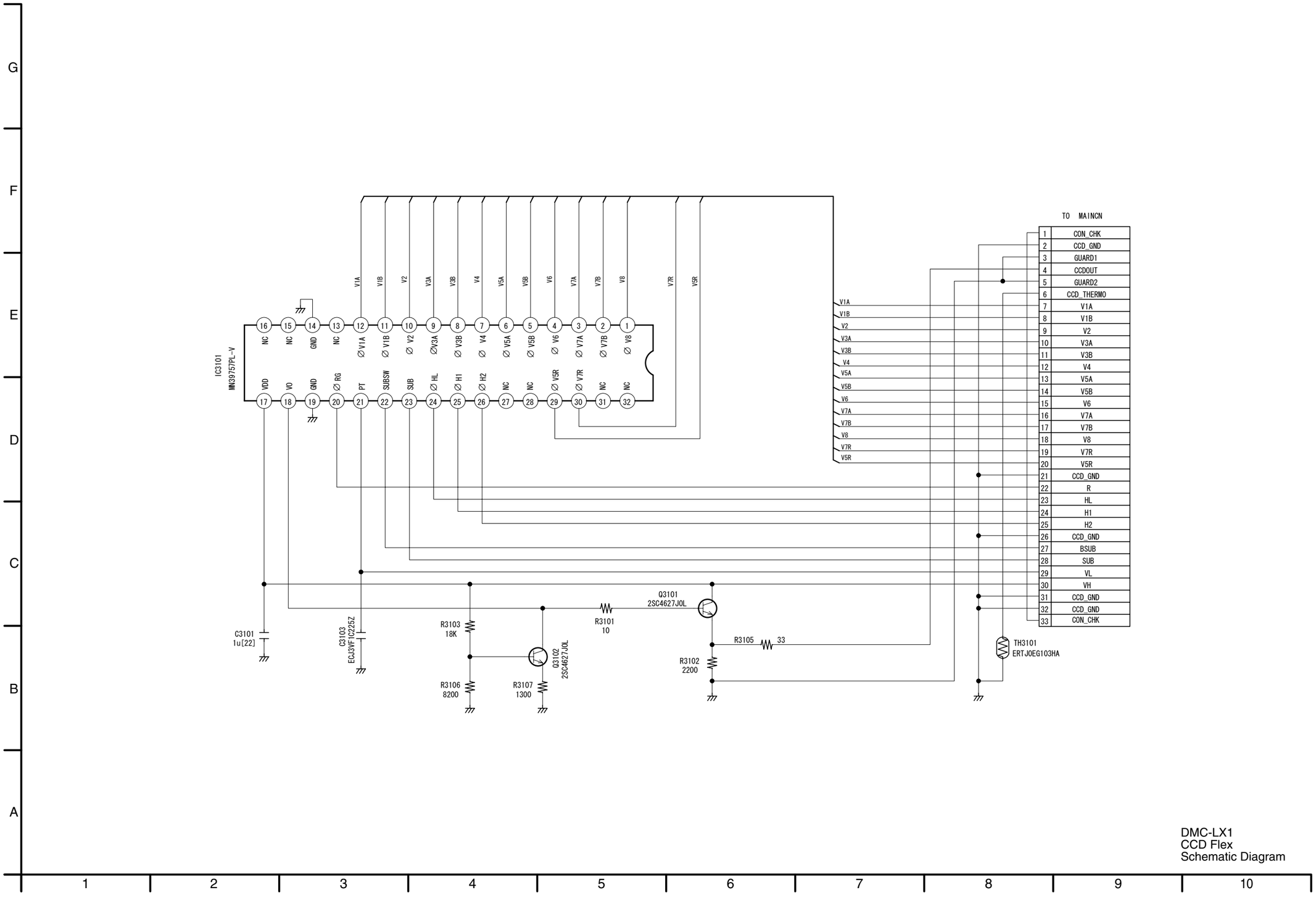

S4. PRINT CIRCUIT BOARD

S4.1. AF-ASSIST P.C.B. / S4.2. TOP-OPE P.C.B.

S4.3. FLASH P.C.B. / S4.4. AFMF-ASPECT FLEX

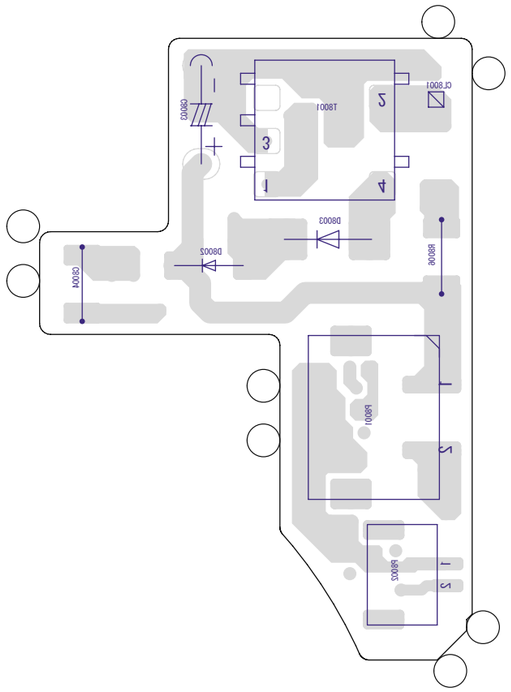

(Component Side)

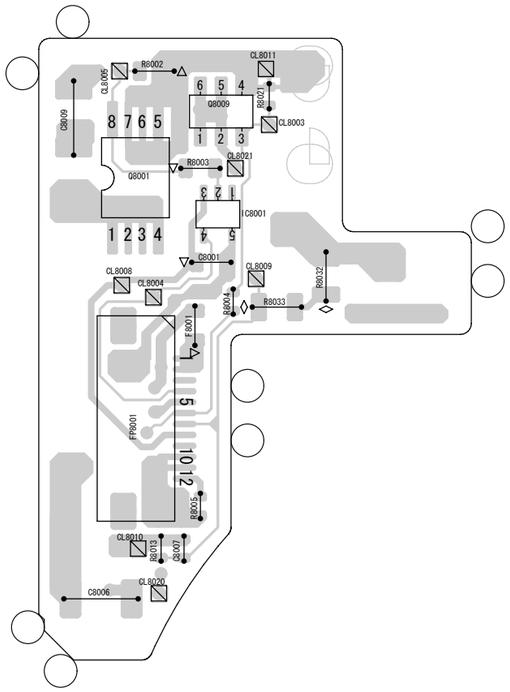

(Foil Side)

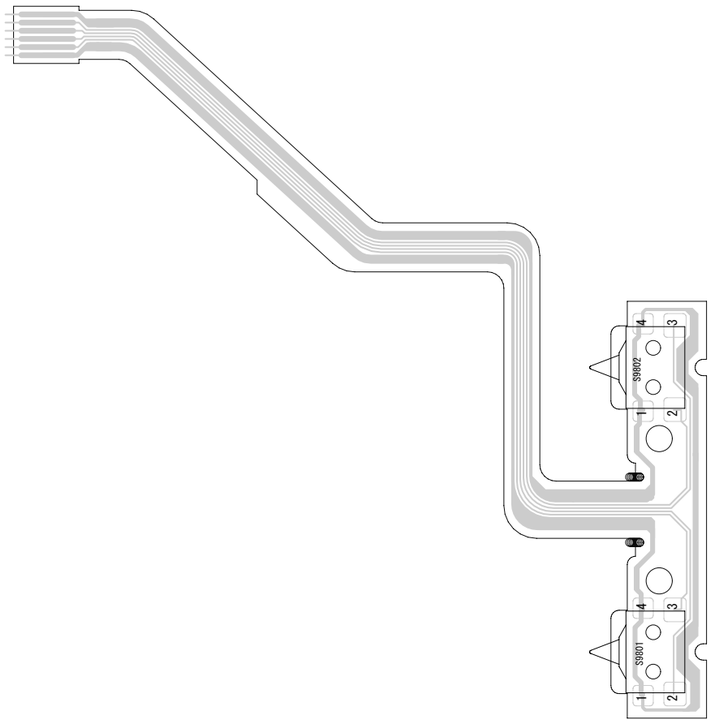

DMC-LX1
Flash P.C.B.

DMC-LX1
AFMF-Aspect Flex

S4.6. LENS FLEX / S4.7. CCD FLEX

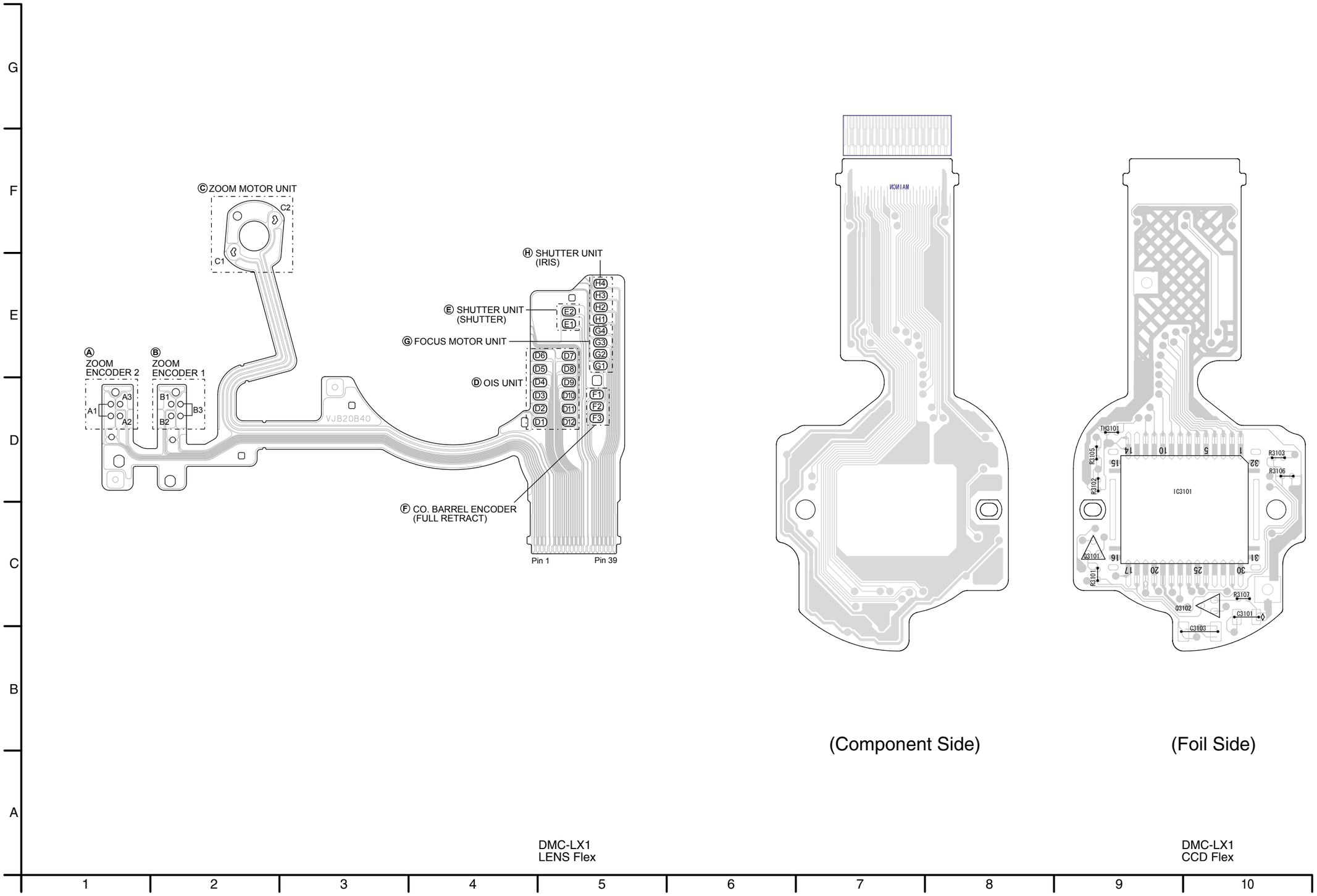

S5. REPLACEMENT PARTS LIST

Note: 1.* Be sure to make your orders of replacement parts according to this list.

2. IMPORTANT SAFETY NOTICE
   Components identified with the mark ⚠ have the special characteristics for safety.
   When replacing any of these components, use only the same type.
3. Unless otherwise specified,
   All resistors are in OHMS, K=1,000 OHMS. All capacitors are in MICRO-FARADS (uf), P=uuF.
4. The P.C.Board units marked width " ▮ " show below the main assembled parts.
5. The marking (RTL) indicates the retention time is limited for this item. After the discontinuation of this assembly in production, it will no longer be available.
6. Supply of CD-ROM, in accordance with license protection, is allowable as replacement parts only for customers who accidentally damaged or lost their own.

E.S.D. standerds for Electrostatically Sensitive Devices, refer to "PREVENTION OF ELECTROSTATIC DISCHARGE (ESD) TO ELECTROSTATICALLY SENSITIVE (ES) DEVICES" section.

Definition of Parts supplier:

1. **Parts marked with [MBI] in the remarks column are supplied from "Matsushita Battery Industrial co., ltd.".**
2. **Parts marked with [PAVC-CSG] in the remarks column are supplied from PAVC COMPANY CS Group (PAVC-CSG). Others are supplied from MKE SAIJYO (MKE).**

Ref.No.	Part No.	Part Name & Description	Pcs	Remarks
■	VEP56026A	MAIN C.B.A.	1	(RTL)
■	VEP59018A	AF ASSIST C.B.A.	1	(RTL)
■	VEP59017A	TOP OPERATION C.B.A.	1	(RTL)
■	VEP58016A	FLASH TOP C.B.A.	1	(RTL)
■	VEP59019A	ASPECT C.B.A.	1	(RTL)
■	VEK0H97	CCD C.B.A.	1	
■	VEP59018A	AF ASSIST C.B.A.		(RTL)
D9901	B3ADB0000057	DIODE	1	
■	VEP59017A	TOP OPERATION C.B.A.		(RTL)
ET9901	K4BC01D00001	EARTH TERMINAL	1	
ET9902	K4BC01D00001	EARTH TERMINAL	1	
⚠ F9901	K5H2022A0011	FUSE	1	
JK9901	K4ZZ03000323	CONNECTOR(BATT.) 3P	1	
PS9901	K1KB30AA0116	CONNECTOR (30P)	1	
R9901	ERJ2GEJ242	M.RESISTOR CH 1/16W 2.4K	1	
R9902	ERJ2GEJ432	M.RESISTOR CH 1/16W 4.3K	1	ERJ2GEJ432X
R9903	ERJ2GEJ822	M.RESISTOR CH 1/16W 8.2K	1	
R9904	ERJ2GEJ243	M.RESISTOR CH 1/16W 24K	1	
R9905	ERJ2GEJ242	M.RESISTOR CH 1/16W 2.4K	1	
R9906	ERJ2GEJ432	M.RESISTOR CH 1/16W 4.3K	1	ERJ2GEJ432X
R9907	ERJ2GEJ822	M.RESISTOR CH 1/16W 8.2K	1	
R9908	D0YAR0000007	M.RESISTOR CH 1/16W 0	1	
S9901	K0G199A00010	SWITCH	1	
S9902	K0F212A00001	SWITCH	1	
S9903	RSS2B037-A	SWITCH	1	K0D122A00098
S9904	ESE23J101	SWITCH	1	
S9905	K0F111A00472	SWITCH	1	
S9906	K0L1BA000118	SWITCH	1	
■	VEP58016A	FLASH TOP C.B.A.		(RTL)
C8001	F1H0J1060002	C.CAPACITOR CH 6.3V 1U	1	
C8003	F2A2F1010005	E.CAPACITOR 300V 100U	1	
C8004	F1K2J102A010	C.CAPACITOR 630V 1000P	1	
C8006	F1K2E4730002	C.CAPACITOR 250V 0.047U	1	
C8007	ECJ0EB1A104K	C.CAPACITOR CH 10V 0.1U	1	
C8009	ECJ3YB0J106K	C.CAPACITOR CH 6.3V 10U	1	
D8002	B0HCMP000006	DIODE	1	
D8003	B0HCGV000002	DIODE	1	
⚠ F8001	K5H122200007	FUSE (32V 1.25A)	1	
FP8001	K1MN12BA0051	CONNECTOR (12P)	1	
IC8001	C0ZBZ0000914	IC	1	
M9901	L0FZBA000004	MICROPHONE	1	

Ref.No.	Part No.	Part Name & Description	Pcs	Remarks
P8001	K1KA02BA0177	CONNECTOR (2P)	1	
P8002	K1KA02BA0022	CONNECTOR (2P)	1	
Q8001	B1JBLP000008	TRANSISTOR	1	
Q8009	B1DFCG000010	TRANSISTOR	1	
R8002	ERJ3GEYJ104	M.RESISTOR CH 1/10W 100K	1	
R8003	ERJ3GEYJ330	M.RESISTOR CH 1/10W 33	1	
R8004	ERJ2GEJ680	M.RESISTOR CH 1/16W 68	1	ERJ2RMJ680X
R8006	ERJ8GEYJ105V	M.RESISTOR CH 1/8W 1M	1	
R8013	ERJ2RHD153X	M.RESISTOR CH 1/16W 15K	1	
R8021	ERJ2GEJ153	M.RESISTOR CH 1/16W 15K	1	
R8032	ERJ6RED105	M.RESISTOR CH 1/16W 1M	1	
R8033	ERJ6RED105	M.RESISTOR CH 1/16W 1M	1	
T8001	G5D1A0000038	TRANSFORMER	1	
■	VEP59019A	ASPECT C.B.A.		(RTL)
S9801	K0L1CB000003	SWITCH	1	
S9802	K0L1CB000003	SWITCH	1	
■	VEK0H97	CCD C.B.A.		
C3101	ECJ2YB1C105K	C.CAPACITOR CH 16V 1U	1	
C3103	ECJ3VF1C225Z	C.CAPACITOR CH 16V 2.2U	1	
Q3101	2SC4627JCL	TRANSISTOR	1	
Q3102	2SC4627JCL	TRANSISTOR	1	
R3101	ERJ2GEJ100	M.RESISTOR CH 1/16W 10	1	
R3102	ERJ2GEJ222	M.RESISTOR CH 1/16W 2.2K	1	
R3103	ERJ2GEJ183	M.RESISTOR CH 1/16W 18K	1	
R3105	ERJ2RKD330	M.RESISTOR CH 1/16W 33	1	
R3106	ERJ2GEJ822	M.RESISTOR CH 1/16W 8.2K	1	
R3107	ERJ2GEJ132	M.RESISTOR CH 1/16W 1.3K	1	
TH3101	ERTJ0EG103HA	THERMISTOR	1	

DMC-LX1PP-S/K,EB-S/K,EG-S/K,EGM-S/K,GC-S/K,GN-S,GK-S/K,GD-K,GT-S,SG-S
M1

Ref.No.	Part No.	Part Name & Description	Pcs	Remarks
1	VEP56026A	MAIN C.B.A.	1	[RTL]
2	VGQ8681	SHEET	1	
3	VYK1T61	BATTERY HOLDER	1	
4	VEE1B85	AF CONNECTOR	1	
5	VEP59018A	AF ASSIST C.B.A.	1	[RTL]
6	VKH0424	STRAP HOLDER	1	
7	VMB3978	BATTERY OUT SPRING	1	
8	VMP8420	TRIPOD	1	
9	VMP8421	BATTERY CASE	1	
10	VGQ8573	JOY COVER	1	
11	VGU9852	JOY STICK KNOB	1	
12	VKF4024	BATTERY DOOR	1	(SILVER)
12	VKF4035	BATTERY DOOR	1	(BLACK)
13	VGQ8622	MIC DAMPER	1	
14	VYF3056	JACK DOOR UNIT	1	(SILVER)
14	VYF3057	JACK DOOR UNIT	1	(BLACK)
15	VYK1T59	FRONT CASE ASS'Y	1	(SILVER)
15	VYK1T60	FRONT CASE ASS'Y	1	(BLACK)
16	VWJ1802	FPC	1	
17	VGQ8519	COUPLING PLATE	1	
18	VYK1Q49	LENS ORNAMENT UNIT	1	
19	VEP59019A	ASPECT C.B.A.	1	[RTL]
20	VGL1169	REAR PANEL LIGHT	1	
22	VGQ8567	LCD BARRIER SHEET	1	
23	VGU9845	CURSOL BUTTON	1	
24	VYK1Q32	LCD ASS'Y	1	
25	L0AA01A00017	BUZZER	1	
26	VEP59017A	TOP OPERATION C.B.A.	1	[RTL]
27	VYK1Q53	TOP PANEL UNIT	1	(SILVER)
27	VYK1Q54	TOP PANEL UNIT	1	(BLACK)
28	VGQ8623	SPEAKER CUSHION	1	
29	VYK1T57	FLASH UNIT	1	(SILVER)
29	VYK1T58	FLASH UNIT	1	(BLACK)
30	VEP58016A	FLASH TOP C.B.A.	1	[RTL]
31	VGQ8637	CAPTON TAPE	1	
32	VMP8422	NUT PLATE	1	
33	VKM6751KIT	REAR CASE	1	(SILVER)
33	VKM6781KIT	REAR CASE	1	(BLACK)

Ref.No.	Part No.	Part Name & Description	Pcs	Remarks
B1	VHD1678	SCREW	1	
B2	VHD1678	SCREW	1	
B3	VHD1810	SCREW	1	
B4	VHD1759	SCREW	1	
B5	VHD1807	SCREW	1	
B6	VHD1810	SCREW	1	(SILVER)
B6	VHD1811	SCREW	1	(BLACK)
B7	VHD1810	SCREW	1	(SILVER)
B7	VHD1811	SCREW	1	(BLACK)
B8	VHD1678	SCREW	1	(SILVER)
B8	VHD1813	SCREW	1	(BLACK)
B9	VHD1678	SCREW	1	(SILVER)
B9	VHD1813	SCREW	1	(BLACK)
B10	VHD1678	SCREW	1	(SILVER)
B10	VHD1813	SCREW	1	(BLACK)
B11	VHD1678	SCREW	1	(SILVER)
B11	VHD1813	SCREW	1	(BLACK)
B12	VHD1678	SCREW	1	(SILVER)
B12	VHD1813	SCREW	1	(BLACK)
B13	VHD1678	SCREW	1	(SILVER)
B13	VHD1813	SCREW	1	(BLACK)
B14	VHD1678	SCREW	1	(SILVER)
B14	VHD1813	SCREW	1	(BLACK)
B15	VHD1814	SCREW	1	
B16	VHD1814	SCREW	1	
B17	VHD1814	SCREW	1	
B18	VHD1814	SCREW	1	
B19	XQN14+BJ35FN	SCREW	1	
B20	VHD1759	SCREW	1	
B21	XQN14+BJ45FN	SCREW	1	
B22	XQN14+BJ6FN	SCRWE	1	
B23	XQN14+BJ6FN	SCRWE	1	
B24	XQN14+BJ35FN	SCREW	1	
B25	XQN14+BJ35FN	SCREW	1	
B26	VHD1812	SCREW	1	
B27	VHD1812	SCREW	1	

Ref.No.	Part No.	Part Name & Description	Pcs	Remarks
103	VEK0H97	CCD C.B.A.	1	
110	VDL1729	OPTICAL FILTER	1	
111	VMB3683	CCD SPRING	1	
112	VMB3683	CCD SPRING	1	
113	VMX3487	CCD CUSHION	1	
115	L6DAACGB0001	ZOOM MOTOR UNIT	1	
116	VEK0H96	LENS FLEX. CARD	1	
116-1	B3NAA0000091	PHOTO SENSOR	1	
116-2	B3NAA0000091	PHOTO SENSOR	1	
117	VXP2557	1ST LENS FRAME UNIT	1	(SILVER)
117	VXP2509	1ST LENS FRAME UNIT	1	(BLACK)
118	VXP2510	2ND LENS FRAME UNIT	1	
119	VXP2517	3RD LENS FRAME UNIT	1	
121	VDW1187	LENS RING, FRONT	1	
122	VXP2558	DRIVE FRAME UNIT	1	(SILVER)
122	VXP2518	DRIVE FRAME UNIT	1	(BLACK)
125	VXQ1355	FIX FRAME UNIT	1	
126	VXQ1356	MASTER FRANGE UNIT	1	
127	VXW0772	LENS U	1	(SILVER)
127	VXW0732	LENS U	1	(BLACK)
B110	VHD1726	SCREW	1	
B111	VHD1726	SCREW	1	
B112	VHD1726	SCREW	1	
B113	XQN14+CJ25FJ	SCREW	1	
B114	XQN14+CJ25FJ	SCREW	1	
B115	XQN14+CJ4FJ	SCREW	1	
B116	XQN14+CJ4FJ	SCREW	1	
B117	XQN14+CJ4FJ	SCREW	1	
B118	XQN14+CJ4FJ	SCREW	1	
B119	XQN14+CJ4FJ	SCREW	1	
B120	XQN14+CJ25FJ	SCREW	1	

Ref.No.	Part No.	Part Name & Description	Pcs	Remarks
⚠ 201	DE-A11B	BATTERY CHARGER	1	PPS,PPK
⚠ 201	DE-A12A	BATTERY CHARGER	1	EBS,EBK,EGS,EGK,
				EGMS,EGMK,GNS
⚠ 201	DE-A12B	BATTERY CHARGER	1	GCS,GCK,GKS,GKK,GDK,SGS
⚠ 201	DE-A12C	BATTERY CHARGER	1	GTS
202	K1HA08CD0007	USB CABLE	1	
203	K1HA08CD0008	AV CABLE	1	
204	VFC4082	STRAP	1	
205	VFC4137	STRING	1	
206	VFF0293-S	CD-ROM	1	PPS,PPK
206	VFF0294-S	CD-ROM	1	EBS,EBK,EGS,EGK,
				EGMS,EGMK,GCS,GCK,GNS,
				GKS,GKK,GDK,GTS,SGS
207	VPF1214	SD CARD BAG	1	
208	VPN6347	PAD	1	PPS,PPK,EGS,EGK,
				EGMS,EGMK,GCS,GCK,SGS
208	VPN6348	PAD	1	EBS,EBK,GNS,GKS,GKK,
				GDK,GTS
209	VPF1100	POLY BAG	1	PPS,PPK,EBS,EBK,
				GNS,GKS,GKK,GDK,GTS
209	VPF1132	POLY BAG	1	EGS,EGK,EGMS,EGMK,
				GCS,GCK,SGS
⚠ 210	VQT0S19	INSTRUCTION BOOK	1	PPS,PPK
		(ENGLISH/SPANISH)		
⚠ 210	VQT0S20	INSTRUCTION BOOK	1	PPS,PPK
		(CANADIAN FRENCH)		
⚠ 210	VQT0S34	INSTRUCTION BOOK	1	EBS,EBK
		(ENGLISH)		
⚠ 210	VQT0S22	INSTRUCTION BOOK	1	EGS,EGK
		(GERMAN)		
⚠ 210	VQT0S23	INSTRUCTION BOOK	1	EGS,EGK
		(FRENCH)		
⚠ 210	VQT0S24	INSTRUCTION BOOK	1	EGS,EGK
		(ITALIAN)		
⚠ 210	VQT0S25	INSTRUCTION BOOK	1	EGS,EGK
		(DUTCH)		
⚠ 210	VQT0S28	INSTRUCTION BOOK	1	EGMS,EGMK
		(SPANISH)		
⚠ 210	VQT0S29	INSTRUCTION BOOK	1	EGMS,EGMK
		(PORTUGUESE)		
⚠ 210	VQT0S30	INSTRUCTION BOOK	1	EGMS,EGMK
		(SWEDISH)		
⚠ 210	VQT0S31	INSTRUCTION BOOK	1	EGMS,EGMK
		(DANISH)		
⚠ 210	VQT0S36	INSTRUCTION BOOK	1	GCS,GCK,SGS
		(ENGLISH)		
⚠ 210	VQT0S37	INSTRUCTION BOOK	1	GCS,GCK,SGS
		(CHINESE(TRADITIONAL))		
⚠ 210	VQT0S38	INSTRUCTION BOOK	1	GCS,GCK,SGS
		(RUSSIAN)		
⚠ 210	VQT0S39	INSTRUCTION BOOK	1	GCS,GCK,SGS
		(ARABIC)		
⚠ 210	VQT0S46	INSTRUCTION BOOK	1	GNS
		(ENGLISH)		
⚠ 210	VQT0S44	INSTRUCTION BOOK	1	GKS,GKK
		(CNINESE(SIMPLIFIED))		
⚠ 210	VQT0S48	INSTRUCTION BOOK	1	GDK
		(KOREAN)		
⚠ 210	VQT0S42	INSTRUCTION BOOK	1	GTS
		(CHINESE(TRADITIONAL))		
⚠ 212	VQT0S86	INSTRUCTION BOOK/PC CONN	1	PPS,PPK
		(ENGLISH/CANADIAN FRENCH)		
⚠ 212	VQT0S90	INSTRUCTION BOOK/PC CONN	1	EBS,EBK
		(ENGLISH)		
⚠ 212	VQT0S88	INSTRUCTION BOOK/PC CONN	1	EGS,EGK
		(GERMAN/FRENCH/ITALIAN/		
		DUTCH)		
⚠ 212	VQT0S89	INSTRUCTION BOOK/PC CONN	1	EGMS,EGMK
		(SPANISH/PORTUGUESE/		
		SWEDISH/DANISH)		
⚠ 212	VQT0S91	INSTRUCTION BOOK/PC CONN	1	GCS,GCK,SGS
		(ENGLISH/		
		CHINESE(TRADITIONAL)/		
		RUSSIAN/ARABIC)		

Ref.No.	Part No.	Part Name & Description	Pcs	Remarks
⚠ 212	VQT0S94	INSTRUCTION BOOK/PC CONN	1	GNS
		(ENGLISH)		
⚠ 212	VQT0S93	INSTRUCTION BOOK/PC CONN	1	GKS,GKK
		(CNINESE(SIMPLIFIED))		
⚠ 212	VQT0S95	INSTRUCTION BOOK/PC CONN	1	GDK
		(KOREAN)		
⚠ 212	VQT0S92	INSTRUCTION BOOK/PC CONN	1	GTS
		(CHINESE(TRADITIONAL))		
⚠ 213	VQT0U14	O/I SOFTWARE	1	PPS,PPK
		(ENGLISH/CANADIAN FRENCH/		
		SPANISH)		
⚠ 213	VQT0U19	O/I SOFTWARE	1	EBS,EBK
		(ENGLISH)		
⚠ 213	VQT0U16	O/I SOFTWARE	1	EGS,EGK
		(GERMAN/FRENCH/ITALIAN/		
		DUTCH)		
⚠ 213	VQT0U18	O/I SOFTWARE	1	EGMS,EGMK
		(SPANISH/PORTUGUESE/		
		SWEDISH/DANISH)		
⚠ 213	VQT0U20	O/I SOFTWARE	1	GCS,GCK,SGS
		(ENGLISH/		
		CHINESE(TRADITIONAL)/		
		RUSSIAN/ARABIC)		
⚠ 213	VQT0U23	O/I SOFTWARE	1	GNS
		(ENGLISH)		
⚠ 213	VQT0U22	O/I SOFTWARE	1	GKS,GKK
		(CNINESE(SIMPLIFIED))		
⚠ 213	VQT0U24	O/I SOFTWARE	1	GDK
		(KOREAN)		
⚠ 213	VQT0U21	O/I SOFTWARE	1	GTS
		(CHINESE(TRADITIONAL))		
214	VYQ3509	BATTERY PROTECTION CASE U	1	
215	RP-SD032BVE0	SD CARD (32MB)	1	
216	VPK3035	PACKING CASE	1	PPS
216	VPK3039	PACKING CASE	1	PPK
216	VPK3036	PACKING CASE	1	EBS,EGS,EGMS,GCS,
				GNS,GTS,SGS
216	VPK3040	PACKING CASE	1	EBK,EGK,EGMK,GCK,GDK
216	VPK3037	PACKING CASE	1	GKS
216	VPK3041	PACKING CASE	1	GKK
⚠ 217	RJA0053-3X	AC CORD W/PLUG	1	EBS,EBK,GCS,GCK,SGS
⚠ 218	K2CQ2CA00006	AC CORD W/PLUG	1	EGS,EGK,EGMS,EGMK,
				GCS,GCK,SGS
⚠ 219	K2CJ2DA00008	AC CORD W/PLUG	1	GNS
⚠ 220	K2CA2CA00020	AC CORD W/PLUG	1	GKS,GKK
⚠ 221	RJA0078-1X	AC CORD W/PLUG	1	GDK
⚠ 222	K2CA2CA00027	AC CORD W/PLUG	1	GTS
223	VPF1137	BAG	1	
224	VYF3055	LENS CAP UNIT	1	
225	----------	BATTERY	1	

S6. EXPLODED VIEWS

S6.1. FRAME & CASING SECTION (1)

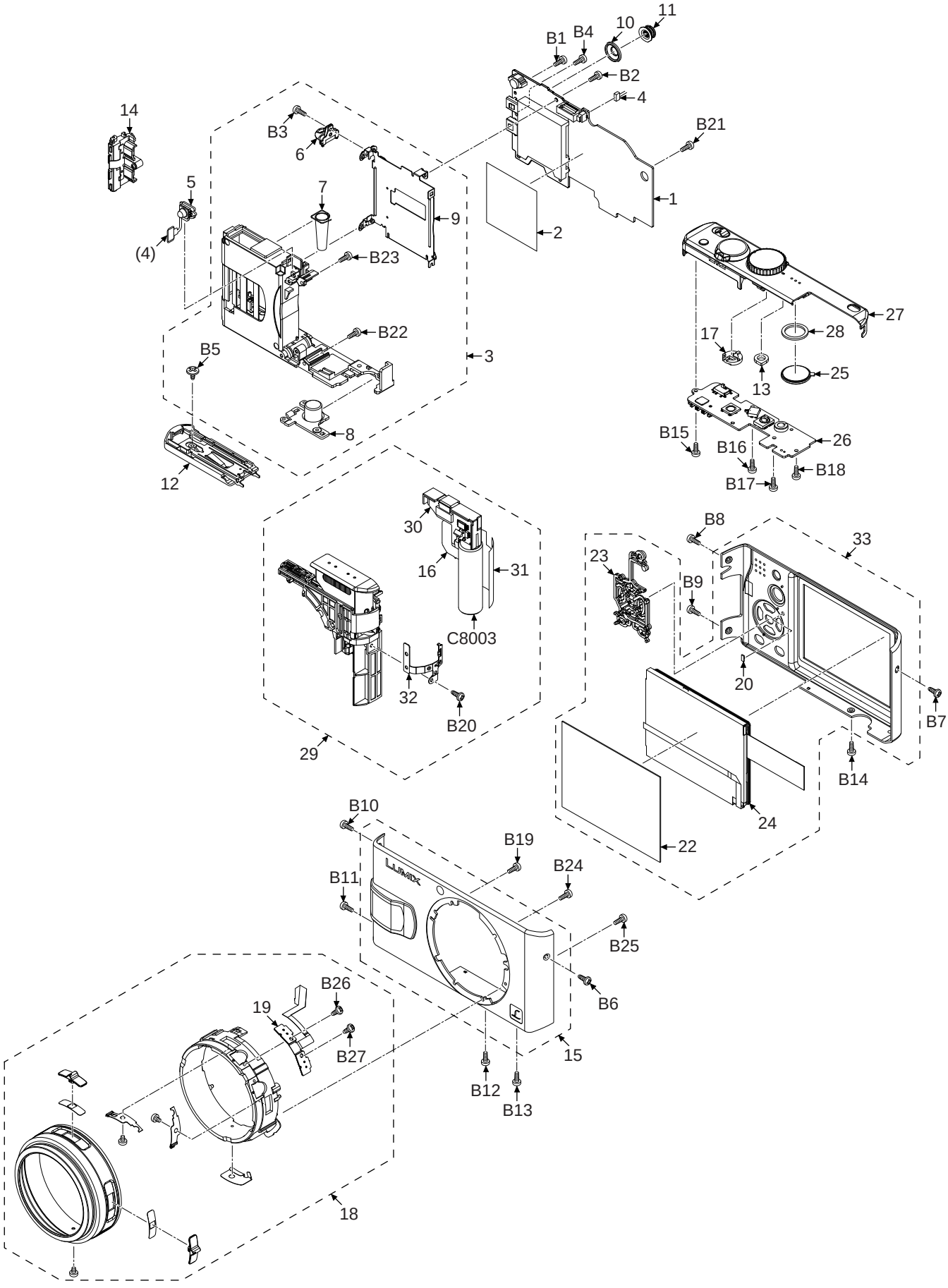

S6.2. FRAME & CASING SECTION (2)

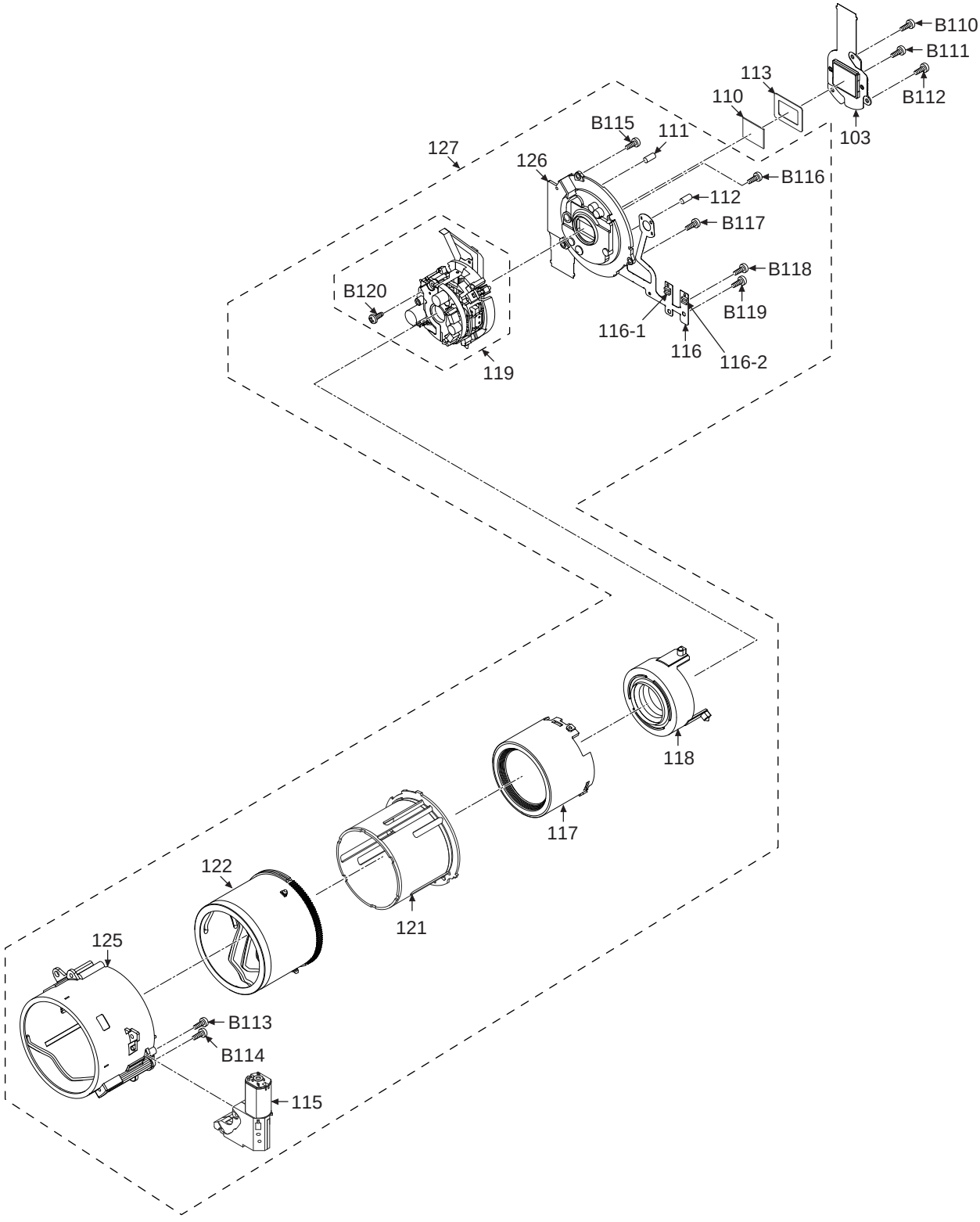
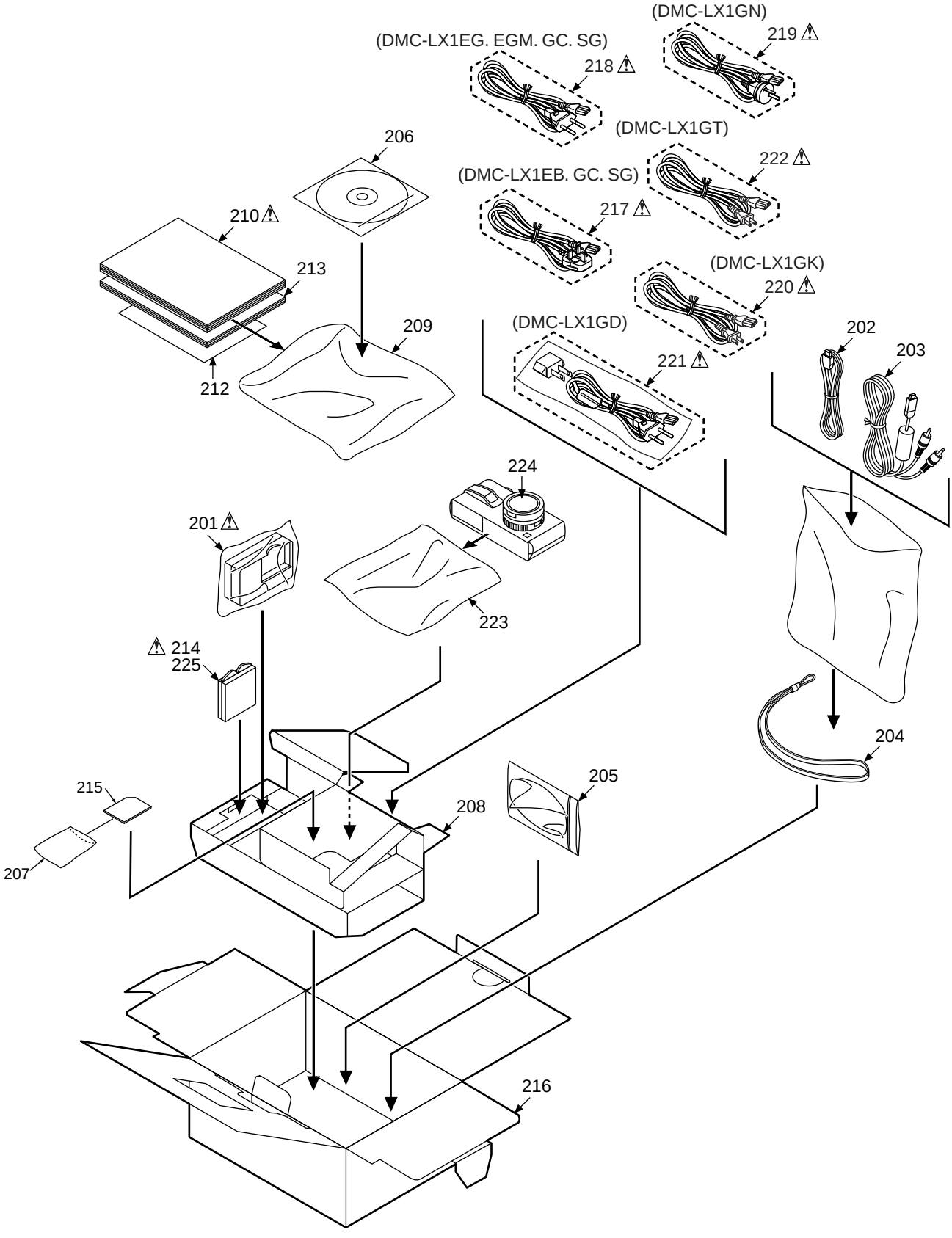
S6.3. PACKING PARTS & ACCESSORIES SECTION